S5-15
ROBOSHOT Series
Maintenance of Injection Mechanical Unit

Provisions for Centering and Adjusting the Screw

版	年月日	担当	変更内容
02	2016.03.18	相場	全ての ROBOSHOT 機種対応
01	2013.01.09	山村	初版

原案作成	2013.01.09	担当	山村	承認	池谷

名称	S5-15　スクリュ芯出し調整 手順規定
番号	ＭＩＤ５６／０２９

ファナック株式会社
生産標準類規定

Contents

1. Purpose 3
2. Scope 3
3. References 3
4. Devices Used 3
5. Precautions for Work 4
6. Preparing for Measurement 4
7. Measurement 6
8. Adjustment of the Screw Center in a ROBOSHOT α-15C/α30C 7
9. Adjustment of the Screw Center in a ROBOSHOT α-50C to α300C 11
10. If It Is Too Difficult to Use the Hammer for Adjustment in a ROBOSHOT α-150C or α-300C 15
11. Adjustment of the Screw Center in a ROBOSHOT α-15iA/α-30iA 16
12. Adjustment of the Screw Center in a ROBOSHOT α-50iA to α-300iA 19
13. Adjustment Procedure When the Amplitude of the X Axis Is Too Large 24
14. Adjustment of the Screw Center in a ROBOSHOT S-2000i5A to S-2000i300A 26
15. Adjustment of the Screw Center in a ROBOSHOT S-2000i15B to S-2000i100B 31
15.1 Vertical Adjustment 32
15.2 Horizontal Adjustment 33
16. Adjustment of the Screw Center in a ROBOSHOT S-2000i150B to S-2000i300B 34
17. Adjustment of the Screw Center in a ROBOSHOT α-S15iA to α-S100iA 35
17.1 Vertical Adjustment 37
17.2 Horizontal Adjustment 38
18. Adjustment of the Screw Center in a ROBOSHOT α-S150iA to α-S300iA 39

1. Purpose

- This document specifies how to measure and adjust the center precision of the barrel and screw in the ROBOSHOT to service equipment at the customer site.

2. Scope

- This document applies to all ROBOSHOT series.

3. References

Assembly and Adjustment Specifications	ROBOSHOT α-C series	A07N-0354-B001
	ROBOSHOT α-iA series	A07N-0520-B001
	ROBOSHOT S-2000iA series	A07N-0521-B001
	ROBOSHOT S-2000iB series	A07N-0522-B001
	ROBOSHOT α-SiA series	A07N-0523-B001
Specifications for Centering the Screw		A-77323

4. Devices Used

Table 1 Measurement Devices

No.	Product name	Qty.	Remarks
(1)	Test indicator	1	Step: 0.01 mm, Range: 0.8 mm to 1.0 mm An indicator with a long gauge head is recommended (e.g., Mitutoyo 513-515).
(2)	Magnet stand	1	Small magnet stand (e.g., TRUSCO Nakayama Minibase M-A)
(3)	Hand mirror or dental mirror	1	

Table 2 Auxiliary Materials

No.	Product name	Qty.	Remarks
(a)	Grease for sealing bearings	Necessary amount	Levert FS-2
(b)	Anti-seize grease	Necessary amount	Omega 99

5. Precautions for Work

[Don't] Do not work with the main power turned on.

[Caution]

- When rotating the screw sleeve or X axis ball screw, turn the pulley by hand.
- The cylinder and screw remain hot even after you turn off the power. Be careful not to get burned.

6. Preparing for Measurement

- Removal of screw: Pull it out.

1) Cleaning the measurement position and the measuring instrument attachment position

(1) Clean the inner circumference section at the back end of the barrel.

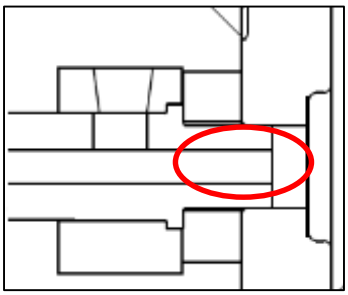

(2) Clean the end of the screw sleeve that the measuring instrument is attached to.

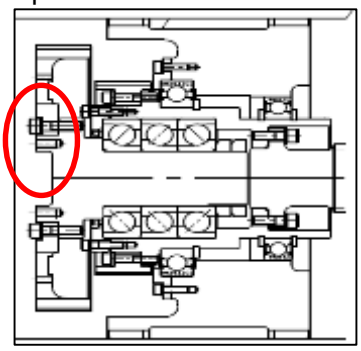

2) Attaching the measuring instrument

(1) Attach the test indicator to the magnet base.

(2) Retract the X axis until you have enough space to attach the measuring instrument.

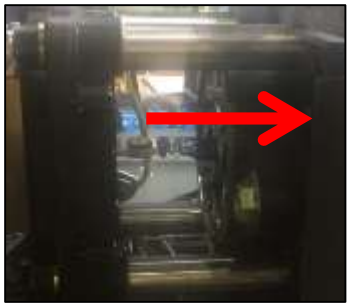

(3) Attach the magnet base to the end of the screw sleeve so that the gauge head of the test indicator faces straight down.

(4) Adjust the gauge head of the test indicator so that it is parallel to the cylinder axis line.

3) Adjusting the position of the measuring instrument

(1) Advance the X axis and move the tip of the gauge head of the test indicator close to the end of the inside of the cylinder.

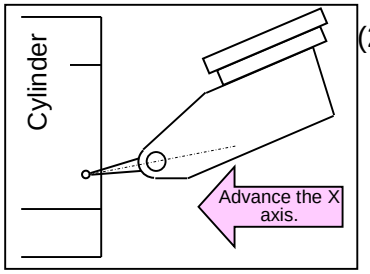

(2) Adjust the position of the test indicator so that it touches the gauge head near the end of the inside of the cylinder.

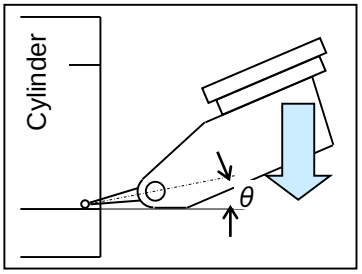

[Important]

- Adjust the position of the test indicator so that the gauge head is pressed down by 0.3 to 0.4 mm.
- If this amount is too small, you may not be able to perform measurement.

(3) Rotate the X axis ball screw in the forward direction **twice** and make sure that the main body of the test indicator does not contact the cylinder.

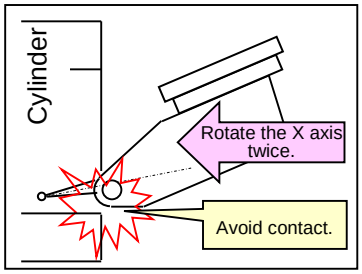

[Angle compensation coefficient]

Angle (θ)	Compensation coefficient (k)
10°	0.98
20°	0.94
30°	0.86
40°	0.76
50°	0.64
60°	0.50

[Important]

- Make the angle between the gauge head and the measuring surface (θ) less than 5° to the extent possible.
- If the angle is 5° or more due to contact or some other cause, correct the read value by multiplying it by the coefficient in the table at the top right.

Real value = Read value x Compensation coefficient (k)

Determining the position of the X axis at which measurement starts

(1) Rotate the X axis ball screw **in the forward direction once** from the end of the inside of the cylinder and measure the run-out of the test indicator.

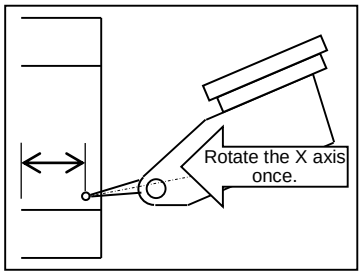

(2) Regard the position of the X axis with the maximum indicator run-out as the X axis measurement start position.

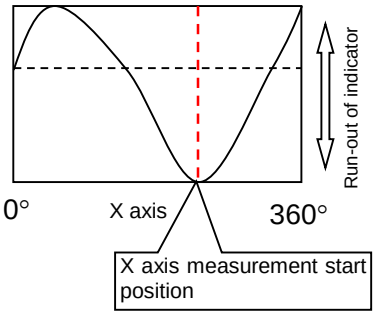

7. Measurement

- Measuring the misalignment between the center of the cylinder and the center of the screw rotation (X axis measurement start position)

(1) Adjust the scale plate so that the dial displays "0" at the lowest point of the inside of the cylinder.

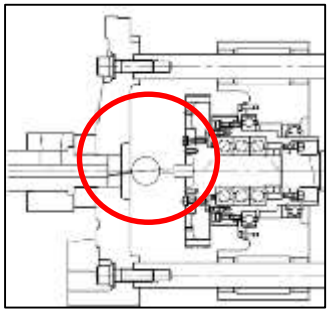

(2) Rotate the screw sleeve and record the value at every 90°. (Be careful about whether the sign is positive or negative.)

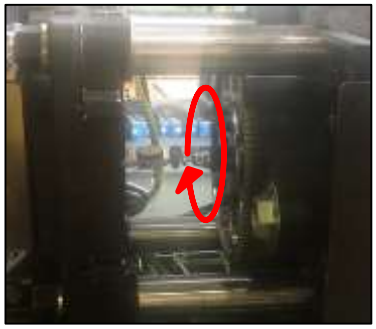

[Important] The direction in which the gauge head is pushed in is regarded as positive ("+"). The direction in which the gauge head is moved away (returned) is regarded as negative ("-").

[Caution]

- Be careful about the sign "+ -" when reading the scale plate using the hand mirror because what you see is reversed.
  (It is recommended that you put + - on the scale plate with a magic marker.)

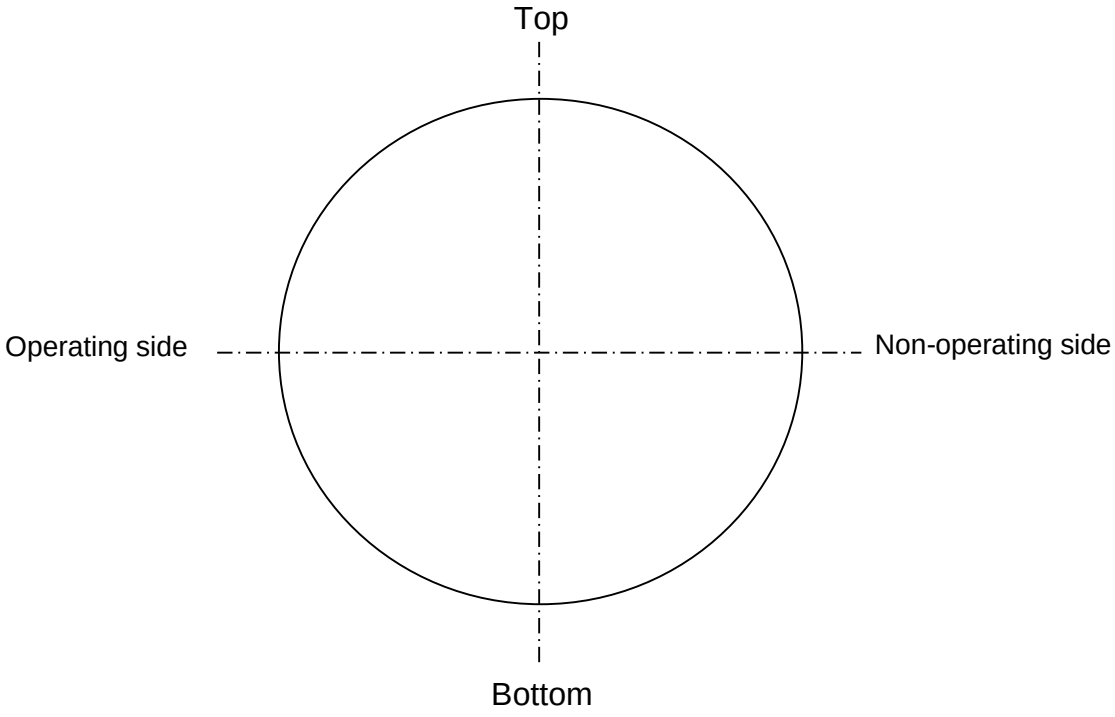

Figure 1 Measurement of Screw Center Misalignment

8. Adjustment of the Screw Center in a ROBOSHOT α-15C/α30C

- Perform adjustment in a machine in which the servo motor has been assembled and the belt tension has been adjusted.

(1) With the screw pulled out, attach the dial gauge to the screw sleeve as shown in the figure and set the dial gauge to 0 at the lower section of the inner circumference of the cylinder.

(2) Rotate the pulley on the screw axis (X axis) once to advance the pusher plate by one lead of the ball screw on the screw axis (X axis). Measure the amplitude at this time and fix the screw axis (X axis) at the position where the gauge value indicates the middle of the width. Measure Distance L (or read the current position on the screw axis from the screen) at this time.

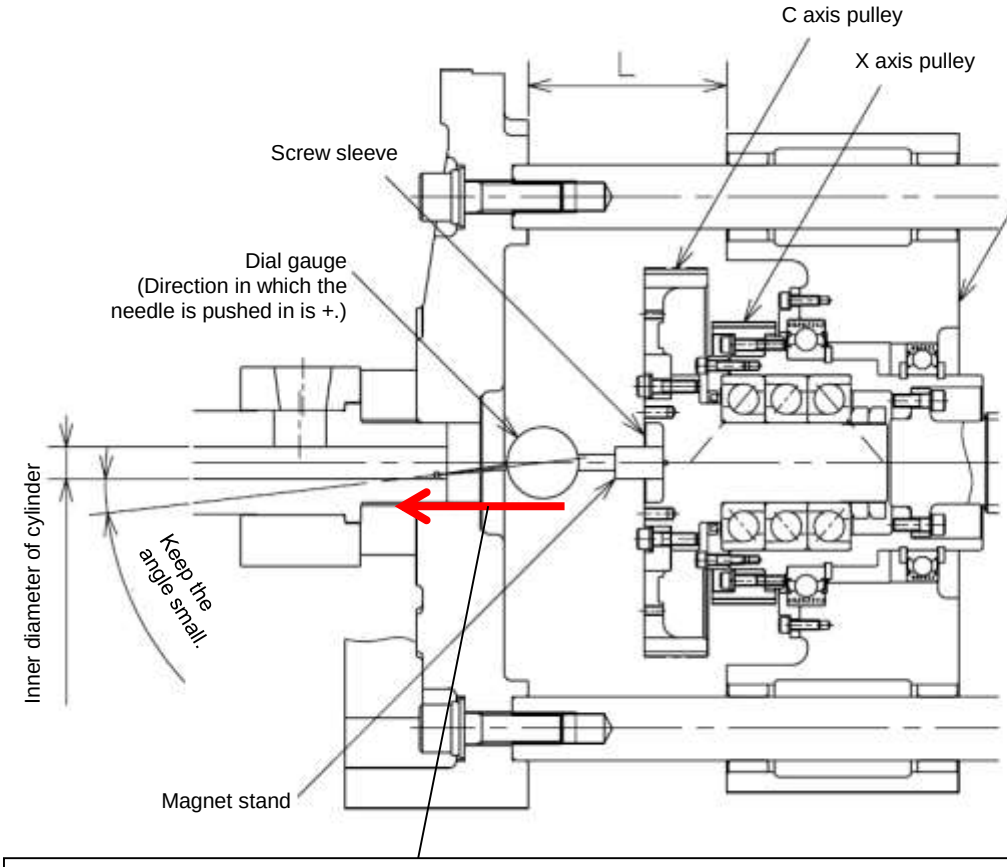

Example) If the run-out of the gauge is -0.01 to -0.05 when you advance the X axis by one lead, fix the X axis at the position where the gauge value is +0.02.

Model	Lead
α-30C	16mm
α-15C	16mm

Rotate the X axis pulley once to advance the pusher plate by one lead. Put markings on the pulley and X axis ball screw for clarity.

Figure 2 ROBOSHOT α-15C or α-30C

Table 3 Tolerance for Adjustment of Center of Screw

Measurement position	Run-out of gauge	Shift of center
Inner diameter of barrel	0.08 or less	0.035 or less

(3) With the screw axis (X axis) fixed, set the dial gauge to 0 at the bottom of the inner circumference of the cylinder, rotate the driven pulley on the screw rotary axis (C axis), and measure the run-out of the dial gauge for the inner circumference of the cylinder as shown in the figure below. At this time, the center of the screw sleeve is half of the run-out of the dial gauge. Adjust it so that this value becomes 0.04 or less.

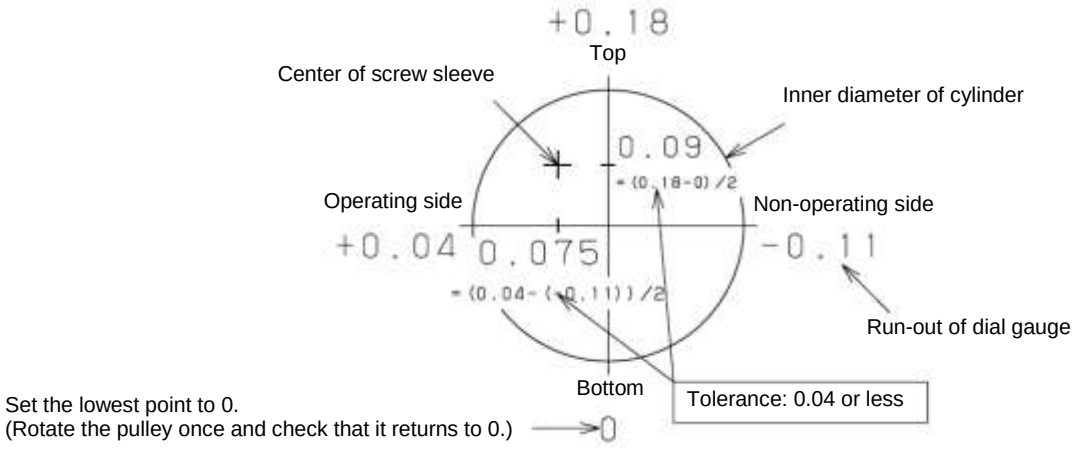

Figure 3 Measurement of Run-out of a Dial Gauge

(4) If the value is outside of the tolerance range, loosen the bolt fixing the stay in the figure below and measure the run-out of the dial gauge again. You can leave the LCD unit attached.

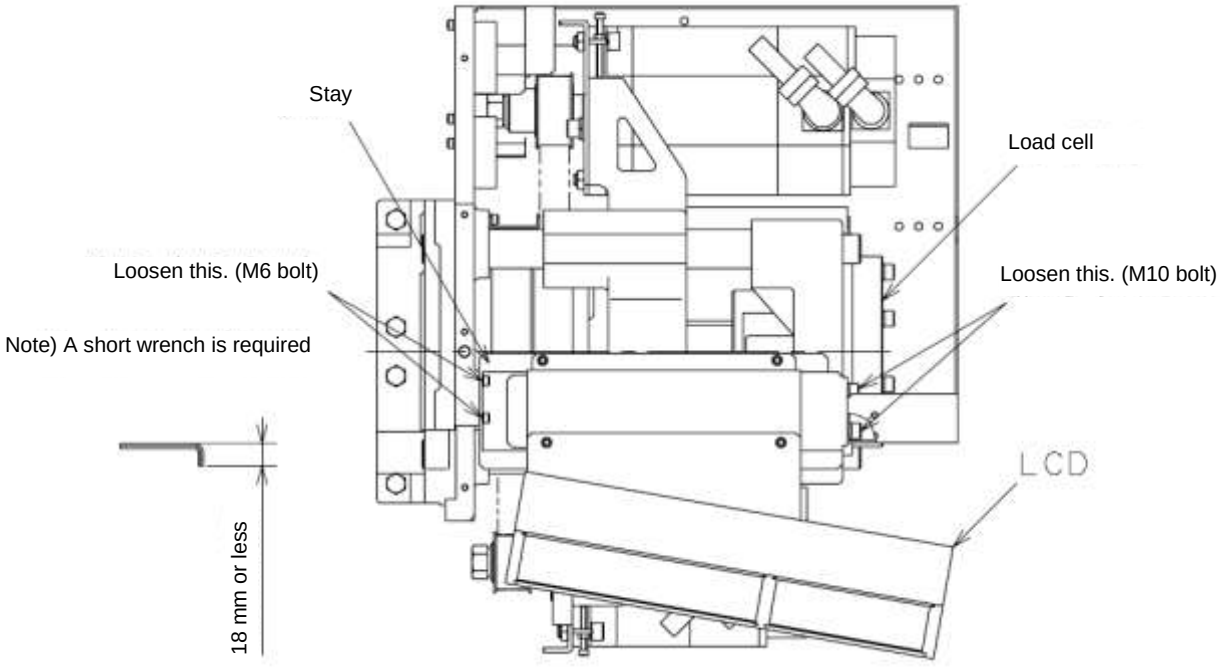

Figure 4 Bolt Fixing the Stay

版	年月日	担当	変更内容
02	2016.03.18	相場	全てのROBOSHOT機種対応
01	2013.01.09	山村	初版

原案作成	2013.01.09	担当	山村	承認	池谷

名称	S5-15　スクリュ芯出し調整手順規定
番号	ＭＩＤ５６／０２９
ファナック株式会社 生産標準類規定	ページ 8／41

(5) If the value is still outside of the tolerance range, rotate the driven pulley on the screw rotary axis (C axis) with the load cell lightly fixed as shown in the figure below, and measure the run-out of the dial gauge.

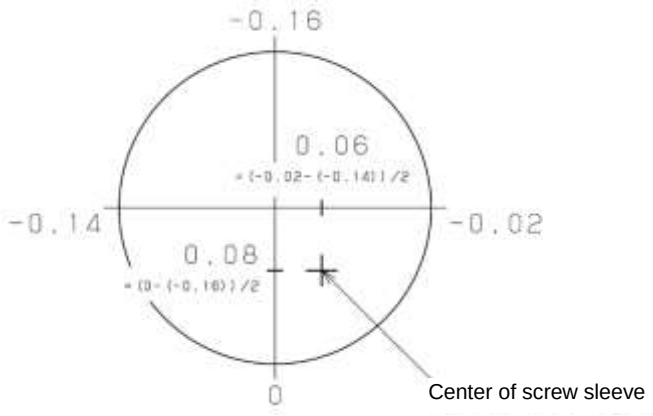

Figure 5 Center Position of Screw Sleeve

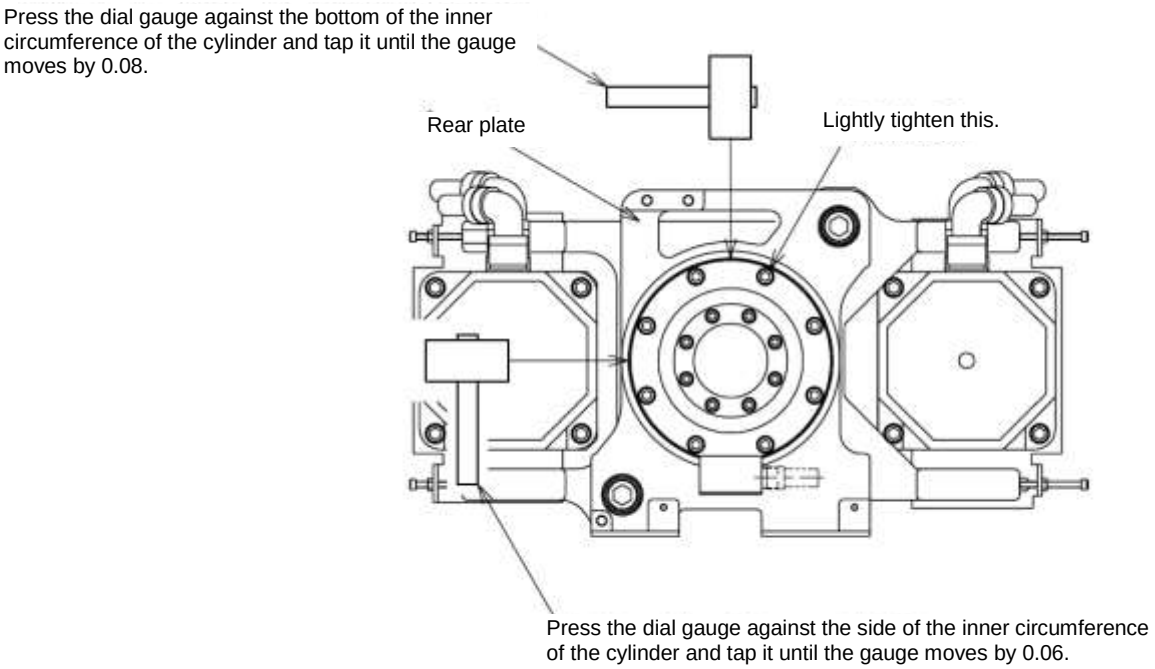

Figure 6 Centering the Screw

(6) If the measurement value falls within the tolerance after adjustment, fix the lightly tightened load cell fixing bolts. Tighten the bolts to 600 kgf•cm with the torque wrench. (Tighten the bolts in a diagonal order.) After tightening the bolts, rotate the driven pulley on the screw rotary axis (C axis) once again and measure the run-out of the dial gauge to check that the value is within the tolerance.

(7) For the ROBOSHOT α15C, check on which side the gap is created when the stay is placed as shown in the figure below and measure the gap with the gap gauge. You can leave the LCD unit attached. Insert shims to fill the gap.

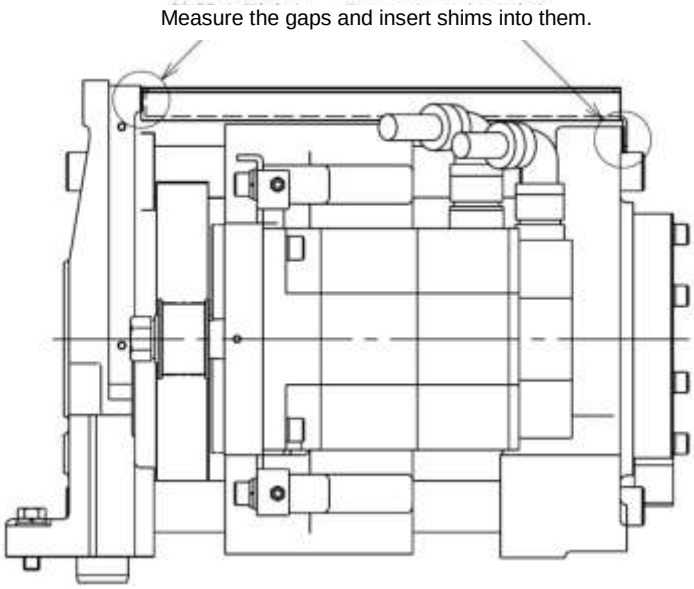

Figure 7 Measurement of Gap and Insertion of Shims

(8) After fixing the stay with the bolts, rotate the driven pulley on the screw rotary axis (C axis) once and measure the run-out of the dial gauge to check that the value is within the tolerance.

(9) Record the following measurement results:

1) Amplitude of X axis (gauge reading) ( ) mm~ ( ) mm

2) Screw position during center measurement L ( ) mm

3) Center measurement value (after adjustment)

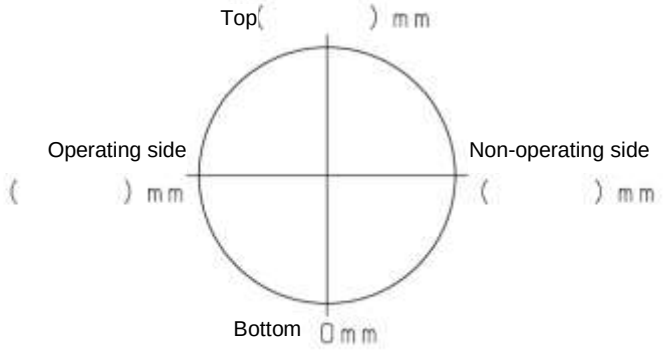

Figure 8 Recording the Measurement Results

9. Adjustment of the Screw Center in a ROBOSHOT α-50C to α300C

- Perform adjustment in a machine in which the servo motor has been assembled and the belt tension has been adjusted.

  (1) With the screw pulled out, attach the dial gauge to the screw sleeve as shown in the figure and set the dial gauge to 0 at the lower section of the inner circumference of the cylinder.

  (2) Rotate the pulley on the screw axis (X axis) once to advance the pusher plate by one lead of the ball screw on the screw axis (X axis). Measure the amplitude at this time and fix the screw axis (X axis) at the position where the gauge value indicates the middle of the width. Measure Distance L (or read the current position on the screw axis from the screen) at this time.

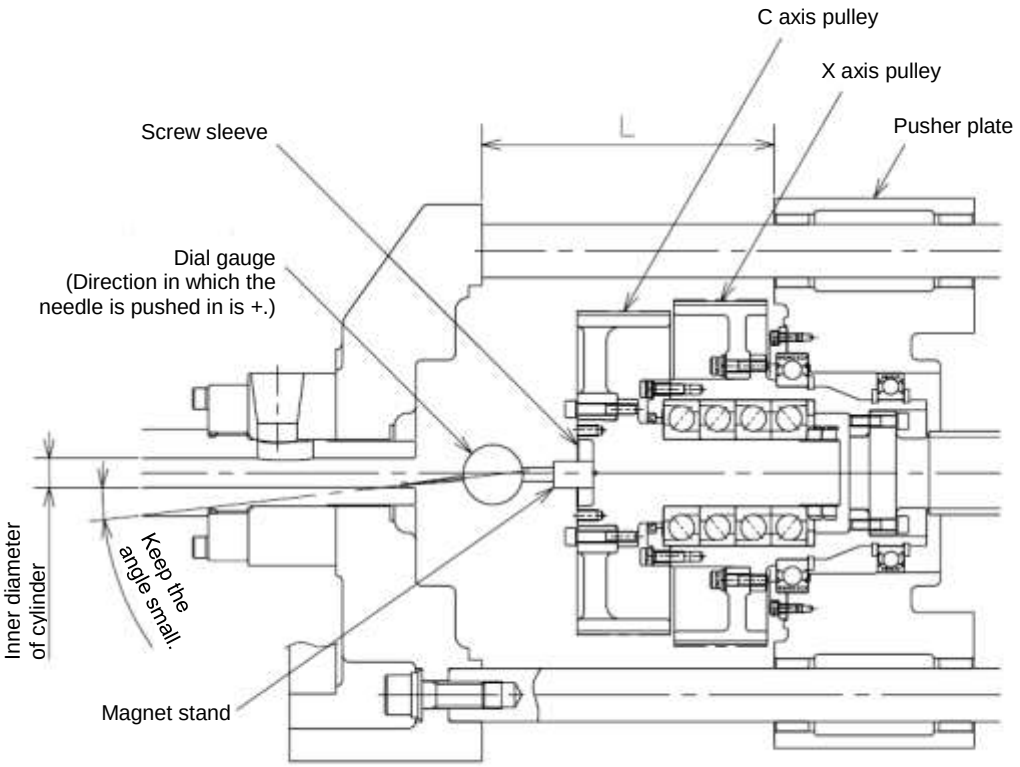

Example) If the run-out of the gauge is -0.01 to -0.05 when you advance the X axis by one lead, fix the X axis at the position where the gauge value is +0.02.

Model	Lead
α-300C	25mm
α-150C	25mm
α-100C	16mm
α- 50C	16mm

Rotate the X axis pulley once to advance the pusher plate by one lead. Put markings on the pulley and X axis ball screw for clarity.

Figure 9 ROBOSHOT α-50C to α-300C

Table 4 Tolerance for Adjustment of Center of Screw

Measurement position	Run-out of gauge	Shift of center
Inner diameter of barrel	0.08 or less	0.035 or less

(3) With the screw axis (X axis) fixed, set the dial gauge to 0 at the bottom of the inner circumference of the cylinder, rotate the driven pulley on the screw rotary axis (C axis), and measure the run-out of the dial gauge for the inner circumference of the cylinder as shown in the figure below. At this time, the center of the screw sleeve is half of the run-out of the dial gauge. Adjust it so that this value becomes 0.04 or less.

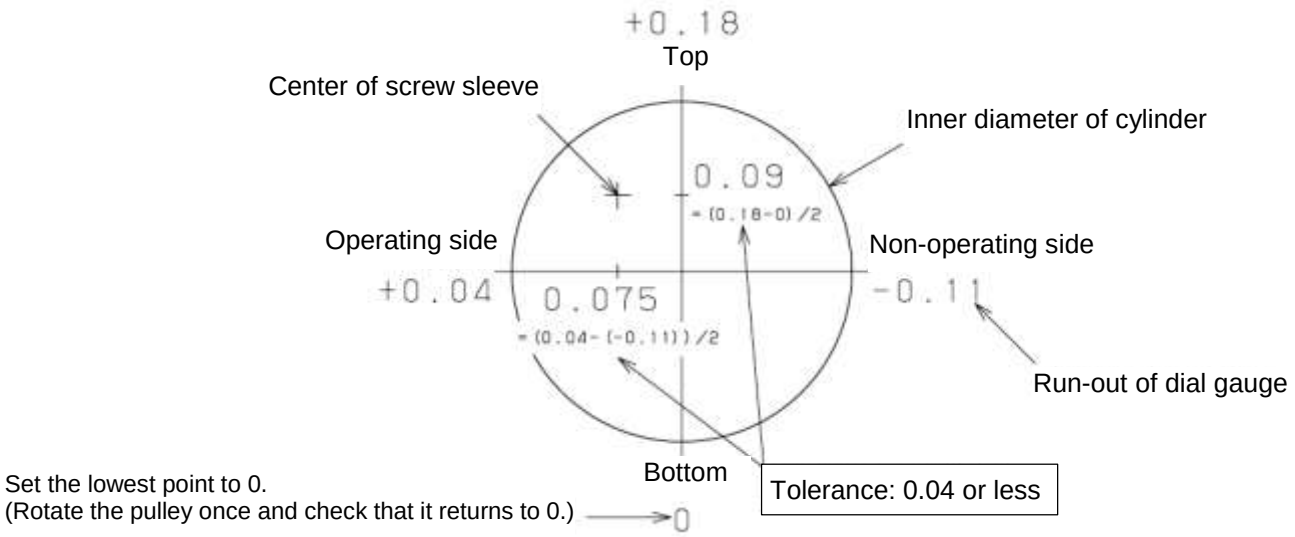

Figure 10 Measurement of Run-out of a Dial Gauge

(4) If the value is outside of the tolerance, loosen the bolts that fix the water jacket. For a ROBOSHOT α-50C or α-100C, you must pull out the cylinder once. For a ROBOSHOT α-150C or α-300C, you must loosen both the set screws and bolts. Adjustment is not required if the value falls within the tolerance.

(5) Hoist the water jacket with the crane or other tool and lightly tighten the bolts so that the water jacket is raised a bit and fixed to the front plate.

(6) With the barrel fixed to the water jacket, rotate the screw rotary axis (C axis) once and measure the run-out of the dial gauge. Check the center position of the screw sleeve and adjust the position by tapping the water jacket with the hammer as shown in the figure below.

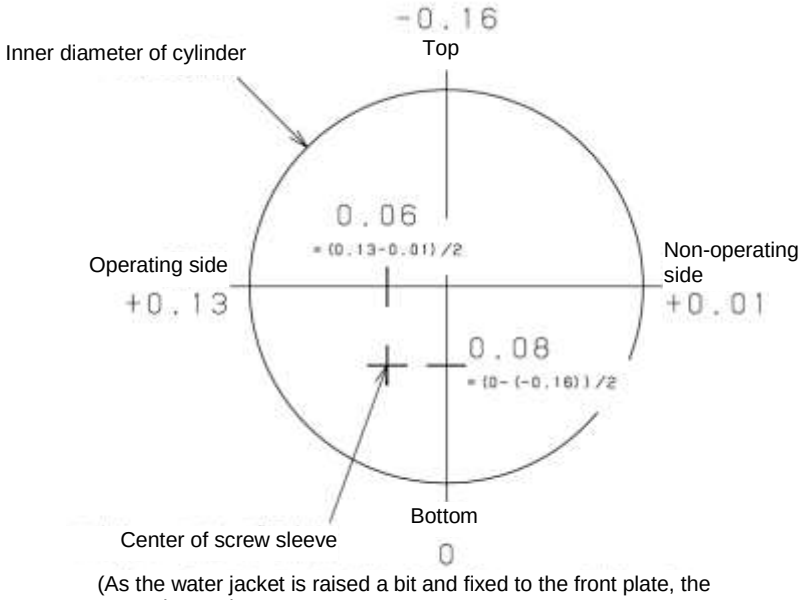

(As the water jacket is raised a bit and fixed to the front plate, the center lowers.)

Figure 11 Center Position of Screw Sleeve

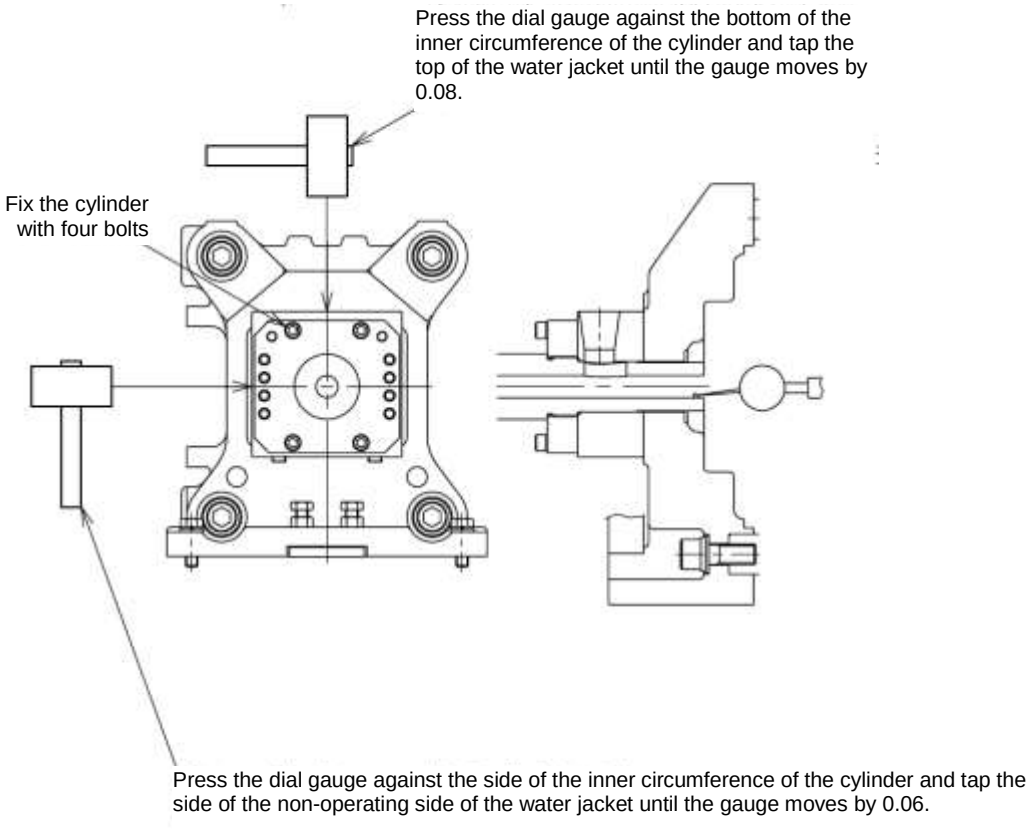

Figure 12 Centering the Screw

(7) If the measurement value falls within the tolerance after adjustment, tighten the bolts that fix the water jacket. For a ROBOSHOT α-50C or α-150C, you must pull out the barrel once. At this time, be careful not to move the temporarily fixed water jacket.

(8) Tighten the barrel fixing bolts. Tighten them in a diagonal order. The center position of the inner diameter of the barrel could shift by about 0.01 mm depending on the tightening method.

(9) Rotate the driven pulley on the screw rotary axis (C axis) again and measure the run-out of the dial gauge to check that the value is within the tolerance.

(10) Record the following measurement results:

1) Amplitude of X axis (gauge reading) (　　) mm～(　　) mm

2) Screw position during center measurement L (　　) mm

3) Center measurement value (after adjustment)

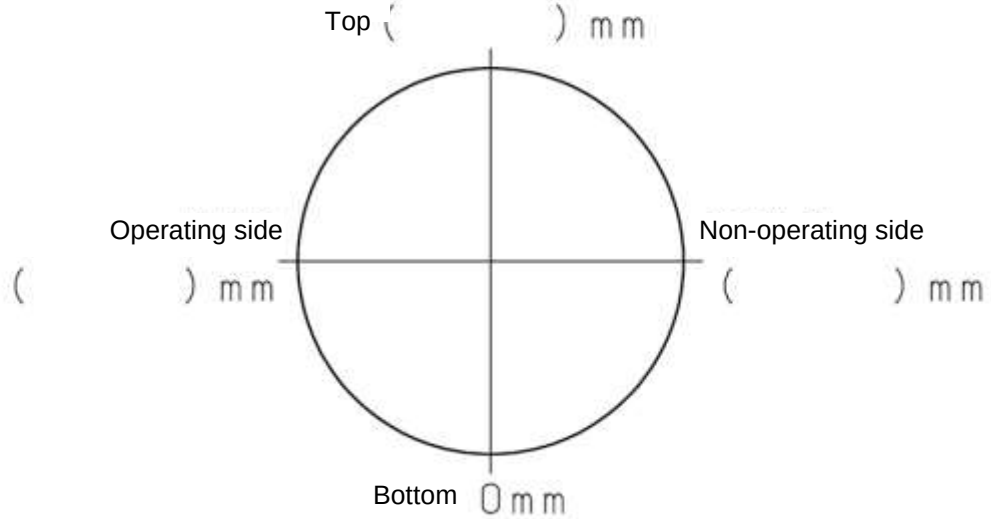

Figure 13 Recording the Measurement Results

10. If It Is Too Difficult to Use the Hammer for Adjustment in a ROBOSHOT α-150C or α-300C

(1) Loosen the bolts fixing the water jacket.

(2) To move the inner circumference of the barrel upward, loosen the right, left, and lower set screws and tighten the upper set screw.

(3) To move the inner circumference of the barrel downward, loosen the right, left, and upper set screws and tighten the lower set screw.

(4) To move the inner circumference of the barrel to the right, loosen the upper, lower, and left set screws and tighten the right set screw.

(5) To move the inner circumference of the barrel to the left, loosen the upper, lower, and right set screws and tighten the left set screw.

(6) If the measurement value falls within the tolerance after you vertically and horizontally adjust the position, tighten the bolts that fix the water jacket.

(7) After fixing the water jacket, be sure to tighten the set screws.

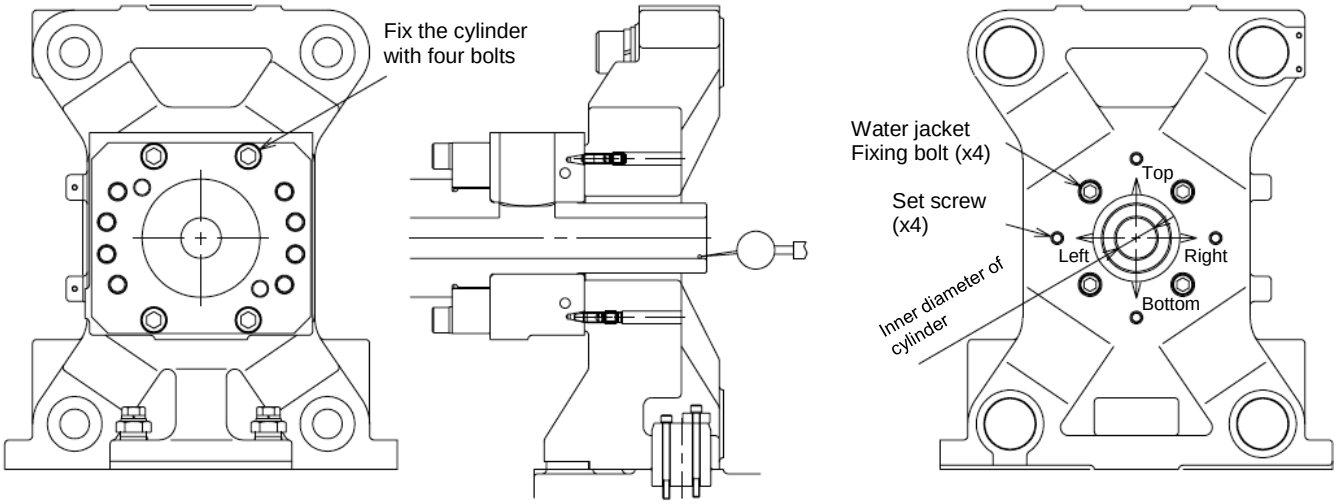

Figure 14 Set Screws and Fixing Bolts

11. Adjustment of the Screw Center in a ROBOSHOT α-15iA/α-30iA

- Perform adjustment in a machine in which the servo motor has been assembled and the belt tension has been adjusted.

  (1) With the screw pulled out, attach the dial gauge to the screw sleeve as shown in the figure and set the dial gauge to 0 at the lower section of the inner circumference of the cylinder.

  (2) Rotate the pulley on the screw axis (X axis) once to advance the pusher plate by one lead of the ball screw on the screw axis (X axis). Measure the amplitude at this time and fix the screw axis (X axis) at the position where the gauge value indicates the middle of the width. Measure Distance L (or read the current position on the screw axis from the screen) at this time.

  (3) If the amplitude is 0.04 or more, see "Adjustment Procedure When the Amplitude of the X Axis Is Too Large."

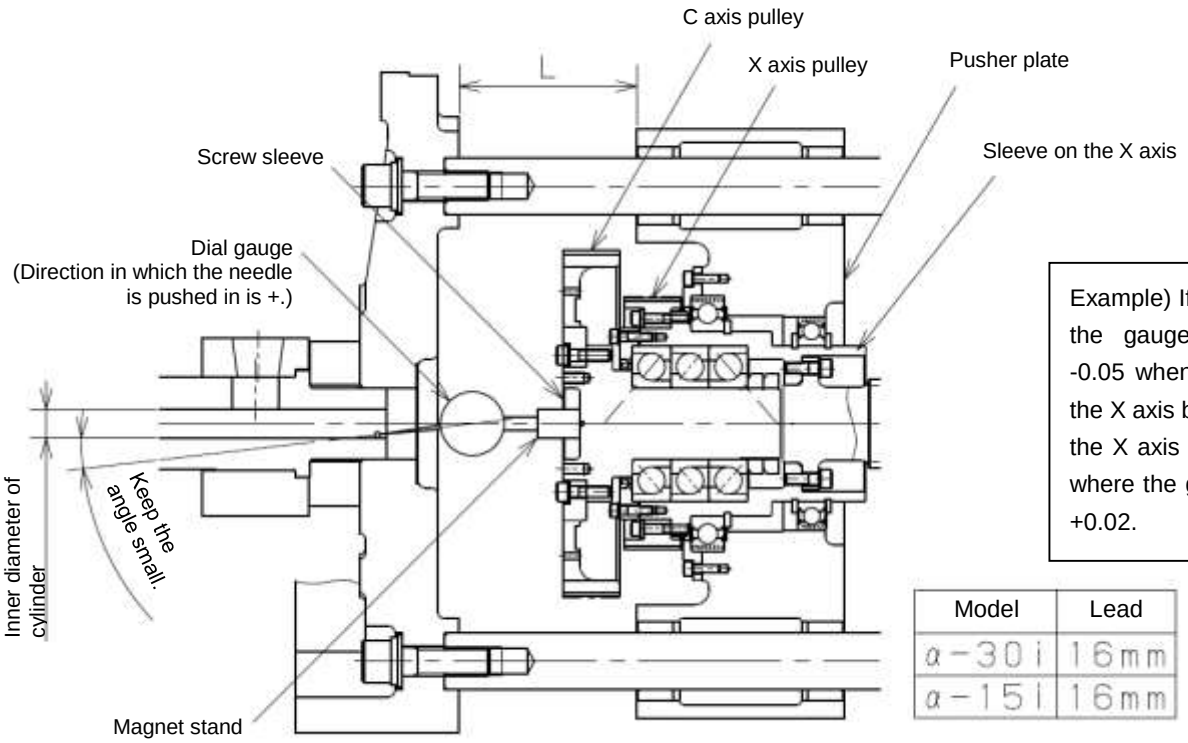

Example) If the run-out of the gauge is -0.01 to -0.05 when you advance the X axis by one lead, fix the X axis at the position where the gauge value is +0.02.

Model	Lead
α-30i	16mm
α-15i	16mm

Rotate the X axis pulley once to advance the pusher plate by one lead. Put markings on the pulley and X axis ball screw for clarity.

Figure 15 ROBOSHOT α-15iA to α-30iA

Table 5 Tolerance for Adjustment of Center of Screw

Measurement position	Run-out of gauge	Shift of center
Inner diameter of barrel	0.08 or less	0.035 or less

(4) With the screw axis (X axis) fixed, set the dial gauge to 0 at the bottom of the inner circumference of the cylinder, rotate the driven pulley on the screw rotary axis (C axis), and measure the run-out of the dial gauge for the inner circumference of the cylinder as shown in the figure below. At this time, the center of the screw sleeve is half of the run-out of the dial gauge. Adjust it so that this value becomes 0.04 or less. The target value is 0.025 or less.

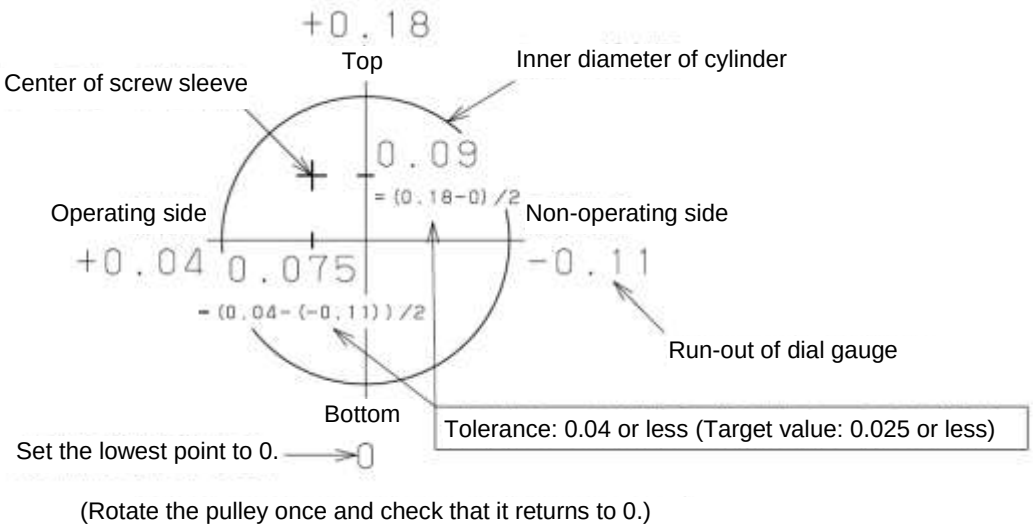

(Rotate the pulley once and check that it returns to 0.)

Figure 16 Measurement of Run-out of a Dial Gauge

(5) If the value is outside of the tolerance range, rotate the pulley on the C axis once with the load cell lightly fixed as shown in the figure below and measure the run-out of the dial gauge. Check the center position of the screw sleeve and adjust the position by tapping the load cell with the hammer as shown in the example below.

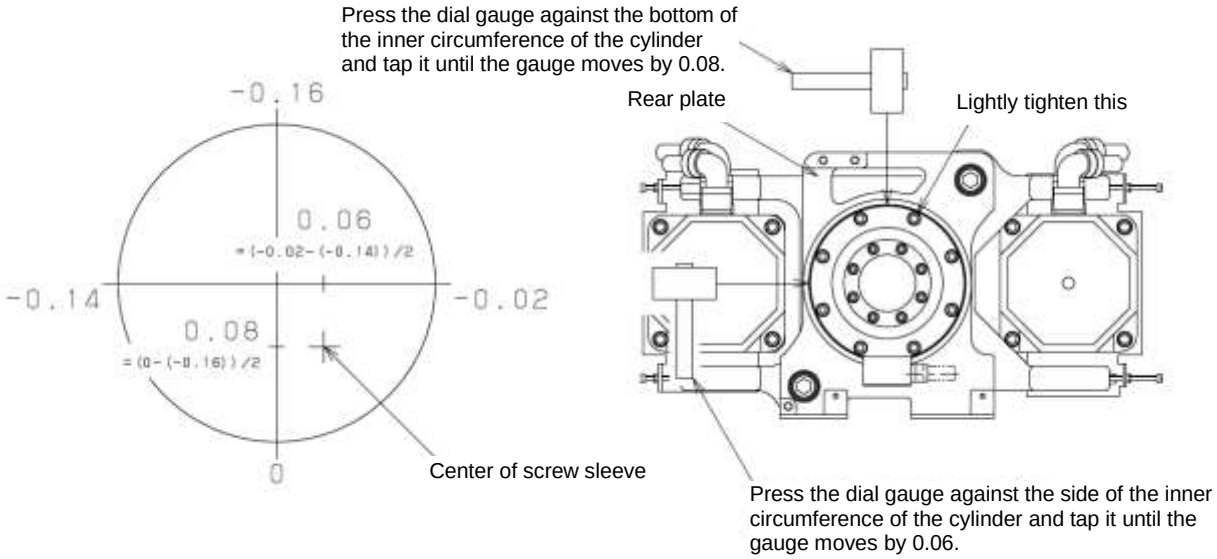

Figure 17 Center Position of Screw Sleeve and Adjustment for Screw Centering

版	年月日	担当	変更内容
02	2016.03.18	相場	全ての ROBOSHOT 機種対応
01	2013.01.09	山村	初版

原案作成	2013.01.09	担当	山村	承認	池谷

名称	S5-15　スクリュ芯出し調整手順規定
番号	ＭＩＤ５６／０２９
ファナック株式会社 生産標準類規定	ページ 17／41

(6) If the measurement value falls within the tolerance after adjustment, fix the lightly tightened load cell fixing bolts. Tighten the bolts to 600 kgf•cm with the torque wrench. Tighten them in a diagonal order. After tightening the bolts, rotate the driven pulley on the screw rotary axis (C axis) once again and measure the run-out of the dial gauge to check that the value is within the tolerance.

(7) Record the following measurement results:

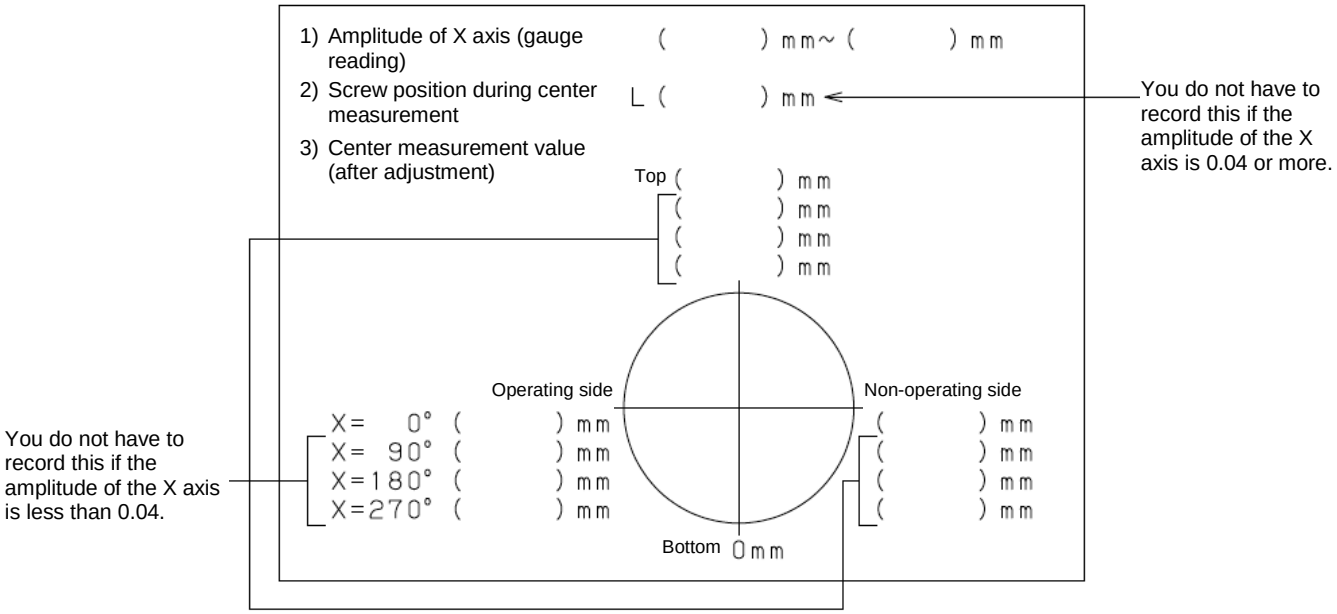

Figure 18 Recording the Measurement Results

12. Adjustment of the Screw Center in a ROBOSHOT α-50iA to α-300iA

- Perform adjustment in a machine in which the servo motor has been assembled and the belt tension has been adjusted.

  (1) With the screw pulled out, attach the dial gauge to the screw sleeve as shown in the figure and set the dial gauge to 0 at the lower section of the inner circumference of the cylinder.

  (2) Rotate the pulley on the screw axis (X axis) once to advance the pusher plate by one lead of the ball screw on the screw axis (X axis). Measure the amplitude at this time and fix the screw axis (X axis) at the position where the gauge value indicates the middle of the width. Measure Distance L (or read the current position on the screw axis from the screen) at this time.

  (3) If the amplitude is 0.04 or more, see "Adjustment Procedure When the Amplitude of the X Axis Is Too Large."

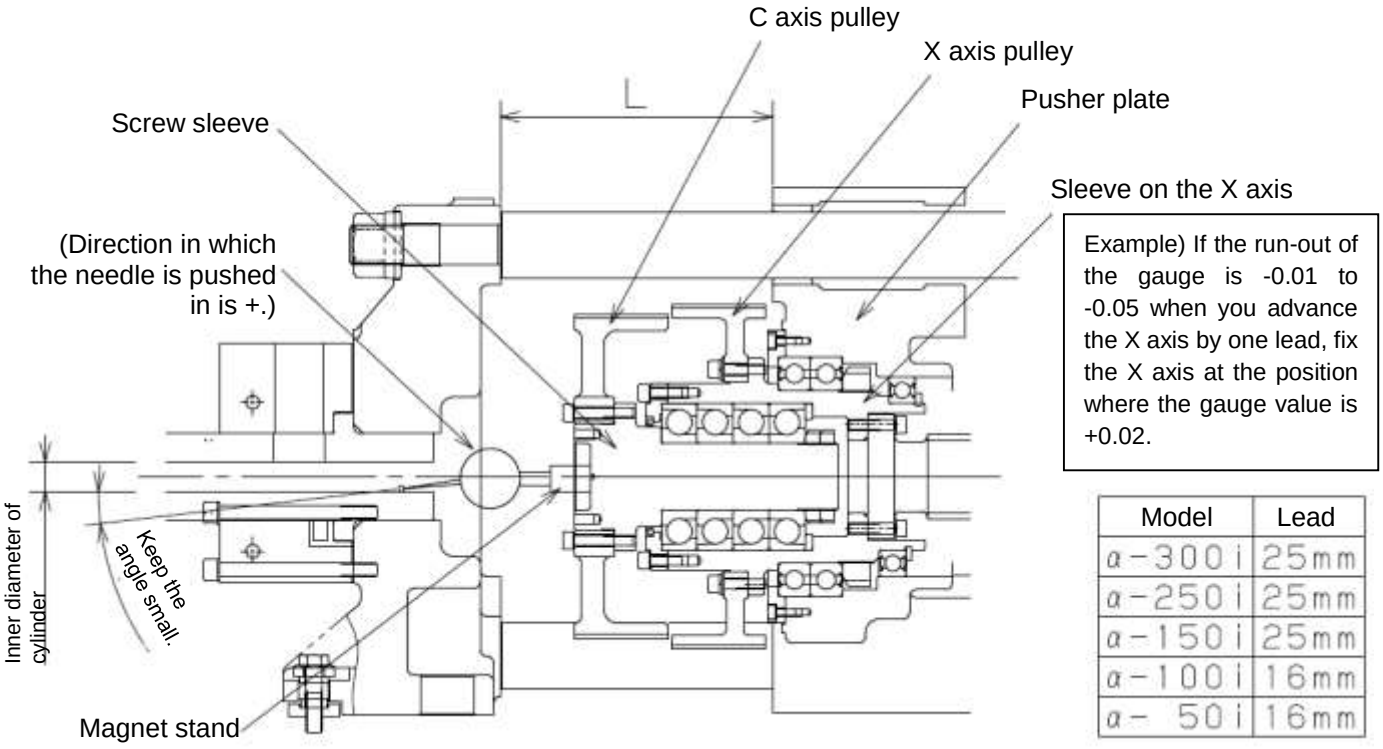

Figure 19 ROBOSHOT α-50iA to α-300iA

Table 6 Tolerance for Adjustment of Center of Screw

Measurement position	Run-out of gauge	Shift of center
Inner diameter of barrel	0.08 or less	0.035 or less

(4) With the screw axis (X axis) fixed, set the dial gauge to 0 at the bottom of the inner circumference of the cylinder, rotate the driven pulley on the screw rotary axis (C axis), and measure the run-out of the dial gauge for the inner circumference of the cylinder as shown in the figure below. At this time, the center of the screw sleeve is half of the run-out of the dial gauge. Adjust it so that this value becomes 0.04 or less. The target value is 0.025 or less.

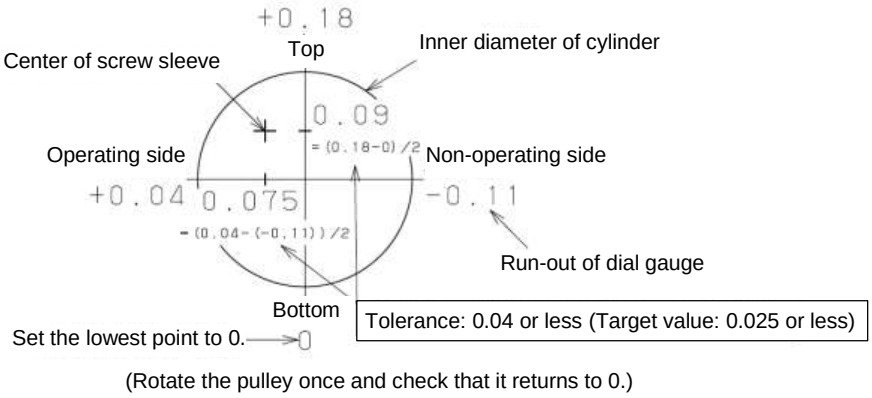

(Rotate the pulley once and check that it returns to 0.)

Figure 20 Measurement of Run-out of a Dial Gauge

(5) If the value is outside of the tolerance range, rotate the pulley on the C axis once with the load cell lightly fixed as shown in the figure below and measure the run-out of the dial gauge. Check the center position of the screw sleeve and adjust the position by tapping the load cell with the hammer as shown in the example below.

(6) Hoist the load cell with the mobile crane and lightly tighten the bolts on the outer side of the load cell (bolt fixing the load cell and the rear plate) so that the load cell is raised a bit and fixed to the rear plate.

(7) With the water jacket and barrel fixed to the front plate, check the center position of the screw sleeve and adjust the position by tapping the load cell with the hammer as shown in the figure below.

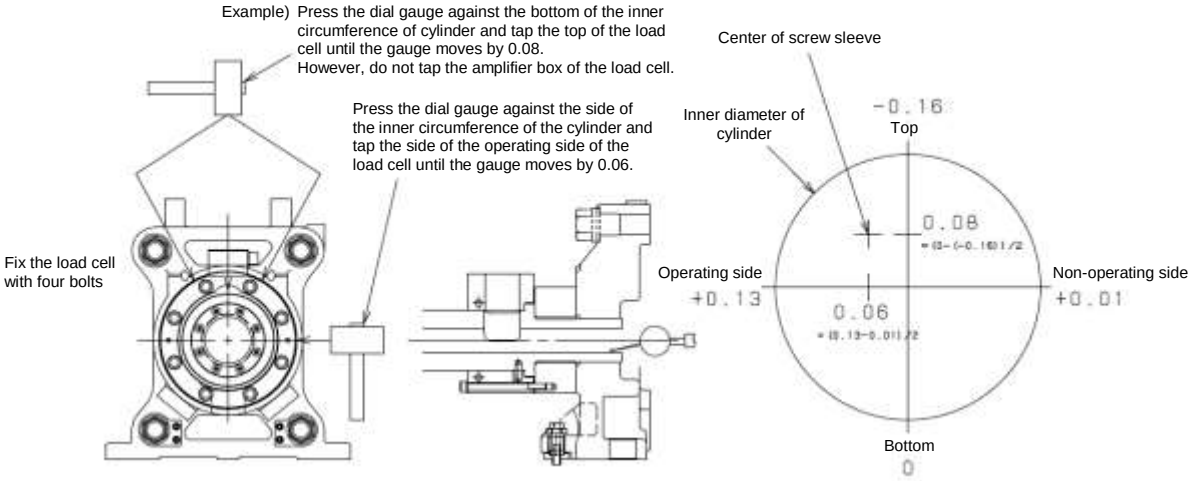

Figure 21 Center Position of Screw Sleeve and Adjustment for Screw Centering

版	年月日	担当	変更内容
02	2016.03.18	相場	全ての ROBOSHOT 機種対応
01	2013.01.09	山村	初版

原案作成	2013.01.09	担当	山村	承認	池谷

名称	S5-15　スクリュ芯出し調整手順規定
番号	ＭＩＤ５６／０２９
ファナック株式会社 生産標準類規定	ページ 20／41

(8) If the measurement value falls within the tolerance after adjustment, fix the lightly tightened load cell fixing bolts. Tighten the bolts with the torque recommended for each bolt size by using the torque wrench. Tighten them in a diagonal order.

Table 7 Rated Tightening Torque List

Nominal	M6	M8	M10	M12	M14	M16	M20	M24	M30
Cap bolt tightening torque (N•m)	12.3	28.9	58.8	101	162	245	475	833	1620

(9) After tightening the bolts, rotate the driven pulley on the screw rotary axis (C axis) once again and measure the run-out of the dial gauge to check that the value is within the tolerance.

(10) Record the following measurement results:

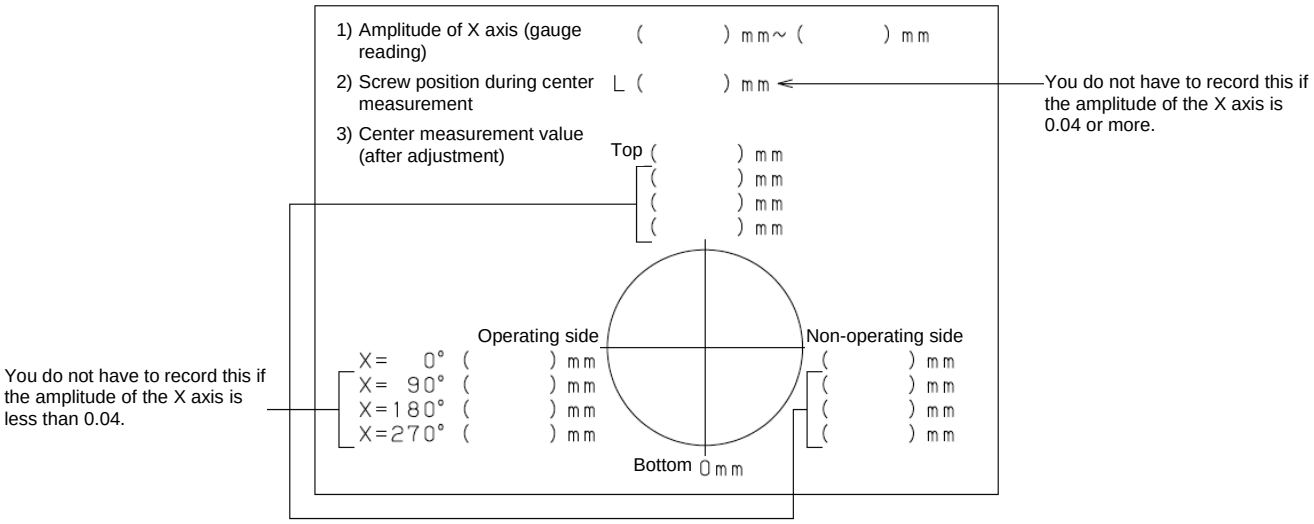

Figure 22 Recording the Measurement Results

(11) If the screw center shift amount is still outside of the tolerance even after the above work, adjust it as described in the next section.

(12) Check the positional relationship between the inner circumference of the barrel and the center of the screw sleeve again and insert shims between the tie rod and the rear plate to adjust it.

Table 8 Shim List

α-50iA α-100iA	A290-5251-X323#03	Thickness t = 0.03	α-150iA or higher	A290-5254-X323#03	Thickness t = 0.03
	A290-5251-X323#03	Thickness t = 0.05		A290-5254-X323#03	Thickness t = 0.05
	A290-5251-X323#03	Thickness t = 0.10		A290-5254-X323#03	Thickness t = 0.10
	A290-5251-X323#03	Thickness t = 0.15		A290-5254-X323#03	Thickness t = 0.15

(13) Loosen the four nuts fixing the tie rods and insert shims into the required positions.

(14) After inserting the shims, tighten the nuts, rotate the driven pulley on the screw rotary axis (C axis) once again, measure the run-out of the dial gauge, and repeatedly adjust it so that the value falls within the tolerance.

Table 9 Rated Tightening Torque List

Nominal	M6	M8	M10	M12	M14	M16	M20	M24	M30
Nut tightening torque (N•m)	5.2	12.5	24.5	42	-	106	-	360	-

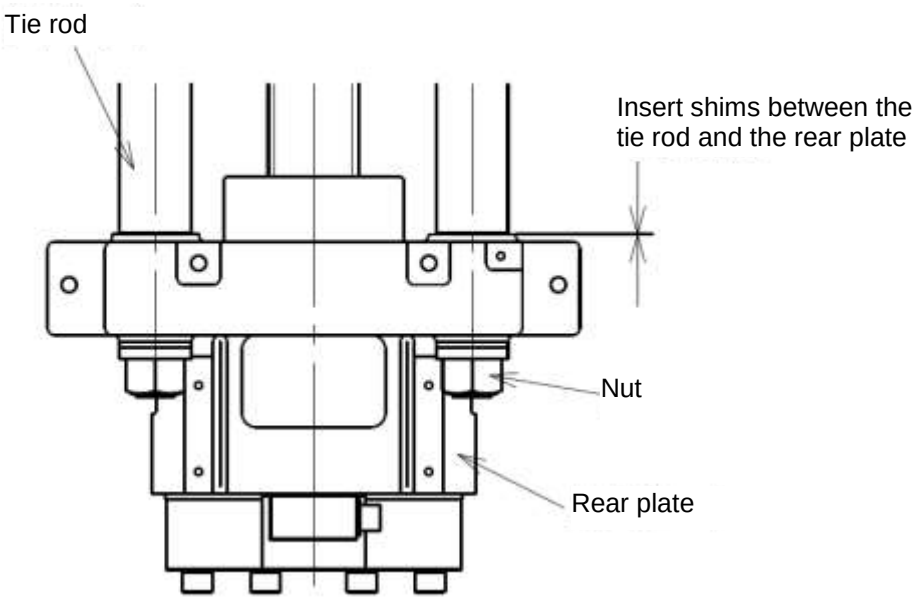

Figure 23 Adjustment for Screw Centering Using Shims

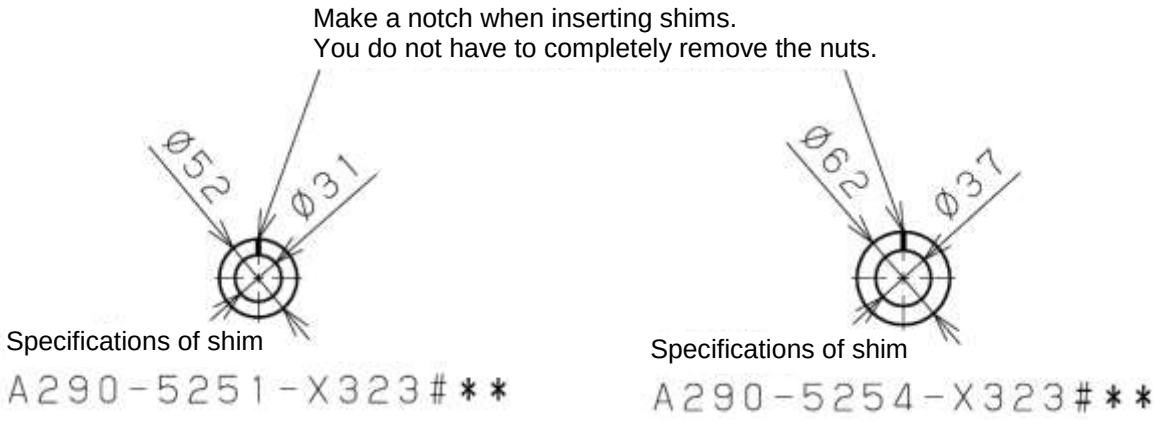

Figure 24 Shape of Shim

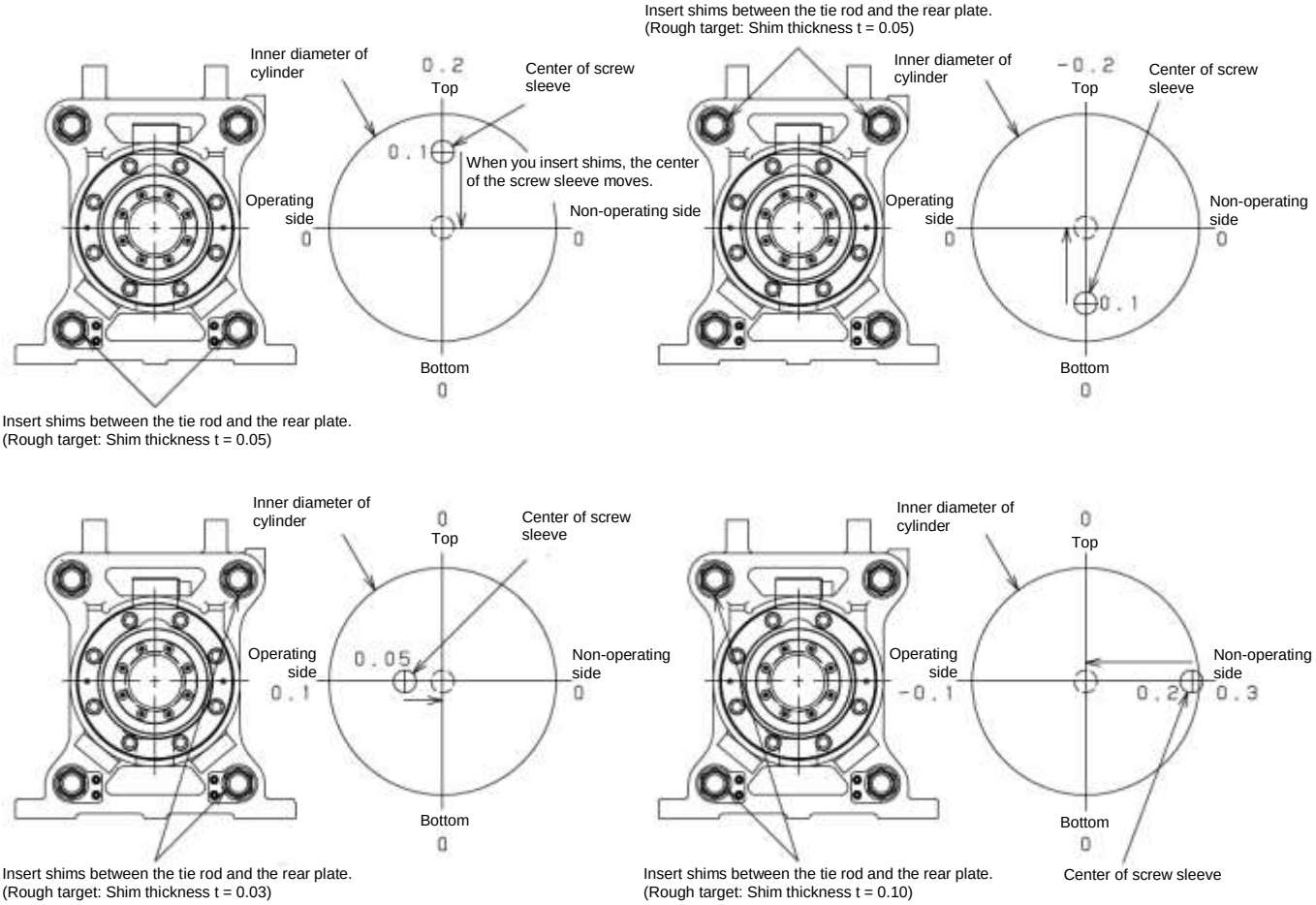

Figure 25 Adjustment Using Shims

版	年月日	担当	変更内容
02	2016.03.18	相場	全ての ROBOSHOT 機種対応
01	2013.01.09	山村	初版

原案作成	2013.01.09	担当	山村	承認	池谷

名称	S5-15　スクリュ芯出し調整手順規定
番号	ＭＩＤ５６／０２９
ファナック株式会社 生産標準類規定	ページ 23／41

13. Adjustment Procedure When the Amplitude of the X Axis Is Too Large

- When you advance the ball screw on the screw axis (X axis) by one lead, the run-out of the dial gauge is the run-out of the sleeve rotary axis on the screw axis (X axis).

- When the run-out of the sleeve rotary axis on the screw axis (X axis) is too large, adjust the center positions of the screw sleeve and the inner circumference of the barrel while taking the run-out range into consideration.

- When you advance the ball screw on the screw axis (X axis) by one lead, perform adjustment with the following procedure if the amplitude of the dial gauge is 0.04 or more.

(1) Attach the dial gauge to the screw sleeve, assume that an appropriate position at which the needle of the dial gauge reaches the inner diameter of the barrel is [X = 0°], and fix the screw axis (X axis) pulley.

(2) Set the scale to 0 at the bottom of the inner circumference of the barrel, rotate the driven pulley on the screw rotary axis (C axis) once, and measure the run-out of the dial gauge for the inner diameter of the barrel, and estimate the center position of the screw sleeve.

(3) Turn the driven pulley on the screw axis (X axis) at intervals of 90°, rotate the screw rotary axis (C axis) at each angle as shown in the figure below, measure the run-out of the dial gauge, and estimate the center of the screw sleeve. Mark the X axis pulley and the end of the ball screw to make the angle apparent.

[Example] The center position of the screw sleeve falls within the tolerance at [X = 0]. However, because the sleeve rotary axis on the screw axis (X axis) runs out, the center position of the screw sleeve goes outside of the tolerance when you turn the driven pulley on the screw axis (X axis).

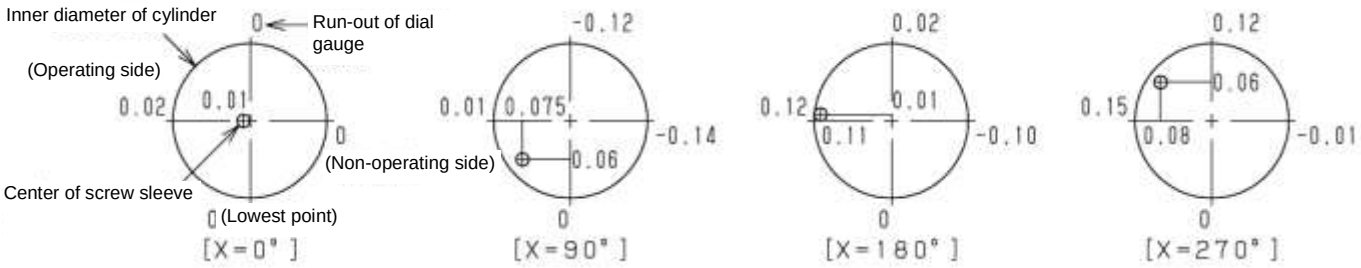

Figure 26 Measurement of the Driven Pulley on the Screw Axis (X Axis) at Intervals of 90°

(4) You can estimate the run-out range of the sleeve rotary axis on the screw axis (X axis) from the center position of the screw sleeve at each angle of the driven pulley on the screw axis (X axis) as shown in the figure below. Here, perform adjustment so that the center of the run-out of the sleeve rotary axis on the screw axis (X axis) matches the center of the inner circumference of the barrel.

(5) For example, perform adjustment so that the center position of the screw sleeve moves to the non-operating side by 0.06 mm at [X = 0°].

(6) Measure the center position of the screw sleeve at [X = 90°, 180°, 270°] and check that the center position of the screw sleeve moves to the non-operating side by 0.06 mm.

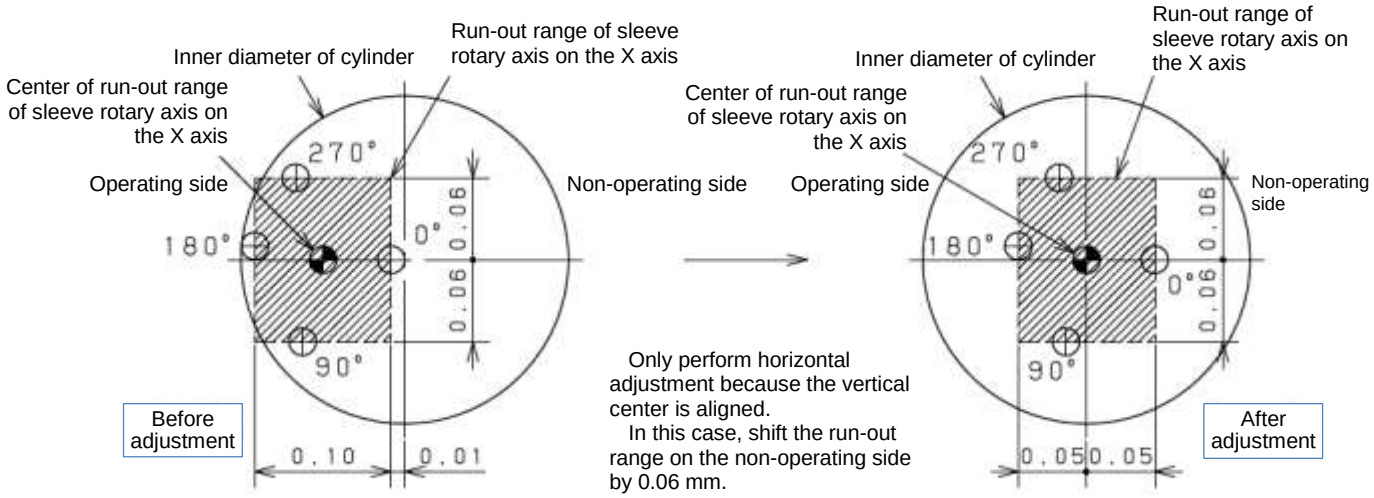

Figure 27 Center Position of the Rotary Axis in the Screw Sleeve

(7) When you rotate the driven pulley on the screw rotary axis (C axis) at [X = 90°, 180°, 270°] once after adjustment, check that the amplitude of the dial gauge is within 0.08.

(8) Record the measurement result at each angle.

Table 10 [Example] Recording the Measurement Results

Measurement position (X = angle)	**0°**	**90°**	**180°**	**270°**	**360°**
Screw position (mm)	107.86	101.61	95.36	89.11	82.86
Bottom (0.01 mm)	0	0	2	2	0
Non-operating side (0.01 mm)	2	5	5	0	1
Top (0.01 mm)	1	0	-3	-3	0
Operating side (0.01 mm)	2	-1	-1	2	2

14. Adjustment of the Screw Center in a ROBOSHOT S-2000i5A to S-2000i300A

- Perform adjustment in a machine in which the servo motor has been assembled and the belt tension has been adjusted.

(1) With the screw pulled out, attach the dial gauge to the screw sleeve as shown in the figure and set the dial gauge to 0 at the lower section of the inner circumference of the cylinder.

(2) Rotate the pulley on the screw axis (X axis) once to advance the pusher plate by one lead of the ball screw on the screw axis (X axis). Measure the amplitude at this time and fix the screw axis (X axis) at the position where the gauge value indicates the middle of the width. Measure Distance L (or read the current position on the screw axis from the screen) at this time.

(3) If the amplitude is 0.04 or more, see "Adjustment Procedure When the Amplitude of the X Axis Is Too Large."

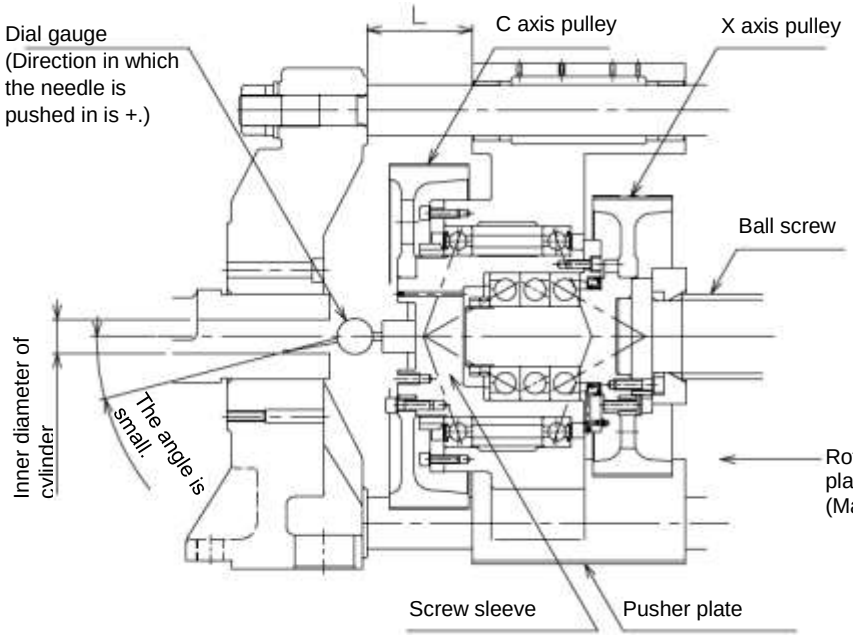

Example) If the run-out of gauge is -0.01 to -0.02 when you advance the X axis by one lead, fix the X axis at the position at which the gauge value is +0.02 and write down the L.

Model	Lead	Model	Lead
S300A	25mm	S 30A	25mm
S150A	25mm	S 15A	25mm
S100A	16mm	S 5A	16mm
S 50A	16mm		
S250A	25mm		

Rotate the X axis pulley once to advance the pusher plate by one lead.
(Mark the pulley with a magic marker, etc. for clarity.)

Figure 28 ROBOSHOT α-50iA to α-300iA

(4) With the screw axis (X axis) fixed, set the dial gauge to 0 at the bottom of the inner circumference of the cylinder, rotate the driven pulley on the screw rotary axis (C axis), and measure the run-out of the dial gauge for the inner circumference of the cylinder as shown in the figure below. At this time, the center of the screw sleeve is half of the run-out of the dial gauge. Adjust it so that this value is the tolerance or less. The target value is 0.025 or less.

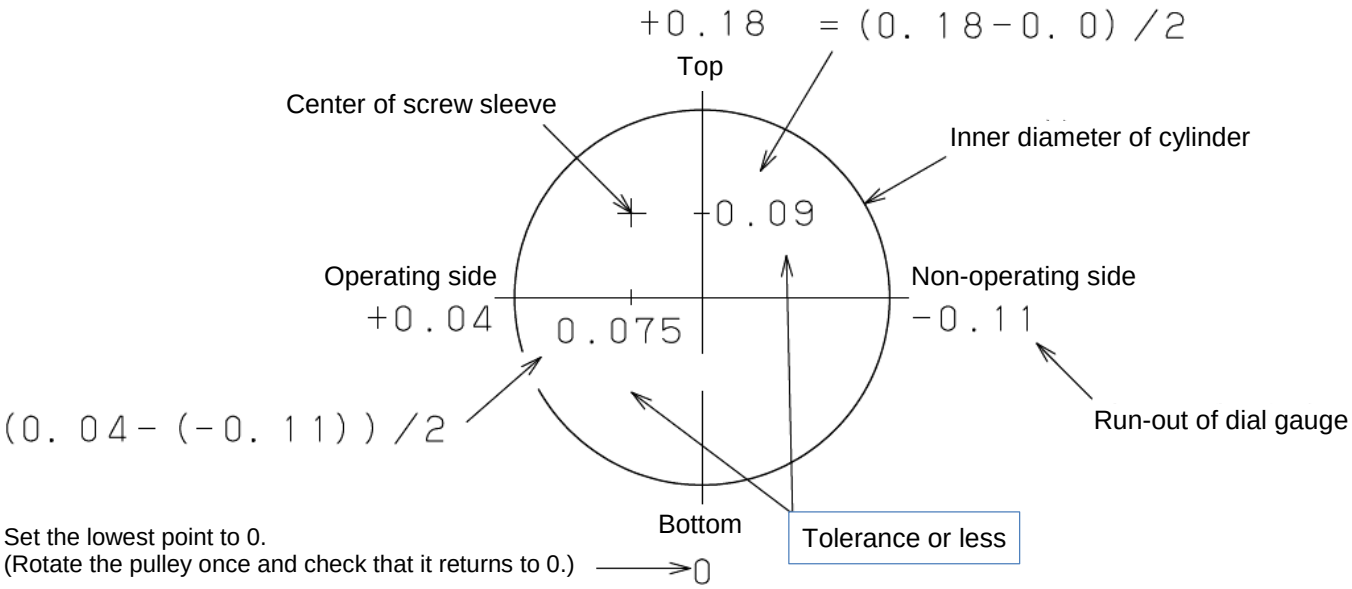

Figure 29 Measurement of Run-out of a Dial Gauge

Measurement position	Reading on the gauge	Measurement position	Reading on the gauge
Top	0.18	Operating side	0.04
Bottom	0.00	Non-operating side	-0.11
Vertical center	+0.09	Horizontal center	+0.075

Table 11 Tolerance for Adjustment of Center of Screw

Specifications	Tolerance	Target value
Standard screw barrel	0.04 or less	0.025 or less
Plated screw	0.03 or less	0.020 or less

(5) If the value is outside of the tolerance range, rotate the pulley on the C axis once with the load cell lightly fixed as shown in the figure below and measure the run-out of the dial gauge. Check the center position of the screw sleeve and adjust the position by tapping the load cell with the hammer as shown in the example below.

(6) Hoist the load cell with the mobile crane and lightly tighten the bolts on the outer side of the load cell (bolt fixing the load cell and the rear plate) so that the load cell is raised a bit and fixed to the rear plate.

(7) With the water jacket and barrel fixed to the front plate, check the center position of the screw sleeve and adjust the position by tapping the load cell with the hammer as shown in the figure below.

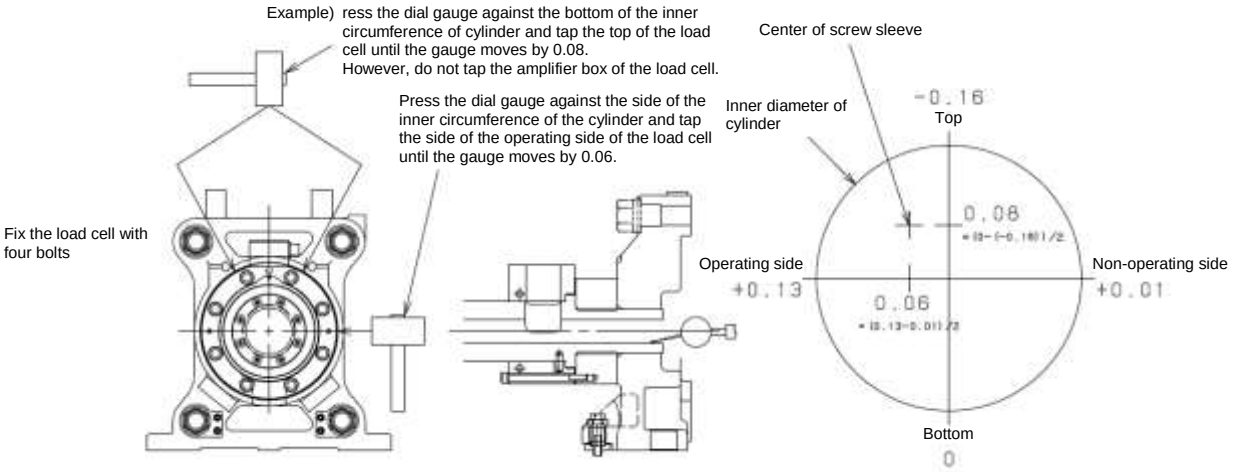

Figure 30 Center Position of Screw Sleeve and Adjustment for Screw Centering

(8) If the measurement value falls within the tolerance after adjustment, fix the lightly tightened load cell fixing bolts. Tighten the bolts with the torque recommended for each bolt size by using the torque wrench. Tighten them in a diagonal order.

Table 12 Rated Tightening Torque List

Nominal	M6	M8	M10	M12	M14	M16	M20	M24	M30
Cap bolt tightening torque (N•m)	12.3	28.9	58.8	101	162	245	475	833	1620

(9) After tightening the bolts, rotate the driven pulley on the screw rotary axis (C axis) once again and measure the run-out of the dial gauge to check that the value is within the tolerance.

(10) Record the following measurement results:

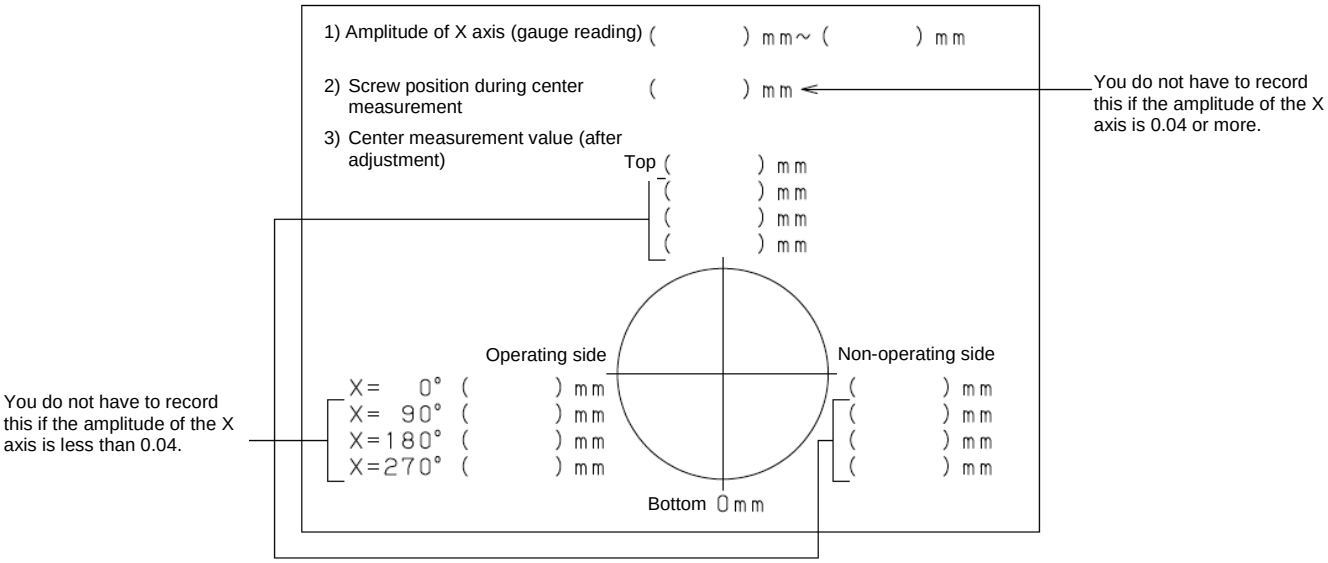

Figure 31 Recording the Measurement Results

(11) If the screw center shift amount is still outside of the tolerance even after the above work, adjust it as described in the next section.

(12) Check the positional relationship between the inner circumference of the barrel and the center of the screw sleeve again and insert shims between the tie rod and the rear plate to adjust it.

Table 13 Shim List

α-50iA α-100iA	A290-5251-X323#03	Thickness t = 0.03	α-150iA or higher	A290-5254-X323#03	Thickness t = 0.03
	A290-5251-X323#03	Thickness t = 0.05		A290-5254-X323#03	Thickness t = 0.05
	A290-5251-X323#03	Thickness t = 0.10		A290-5254-X323#03	Thickness t = 0.10
	A290-5251-X323#03	Thickness t = 0.15		A290-5254-X323#03	Thickness t = 0.15

(13) Loosen the four nuts fixing the tie rods and insert shims into the required positions.

(14) After inserting the shims, tighten the nuts, rotate the driven pulley on the screw rotary axis (C axis) once again, measure the run-out of the dial gauge, and repeatedly adjust it so that the value falls within the tolerance.

Table 14 Rated Tightening Torque List

Nominal	M6	M8	M10	M12	M14	M16	M20	M24	M30
Nut tightening torque (N•m)	5.2	12.5	24.5	42	-	106	-	360	-

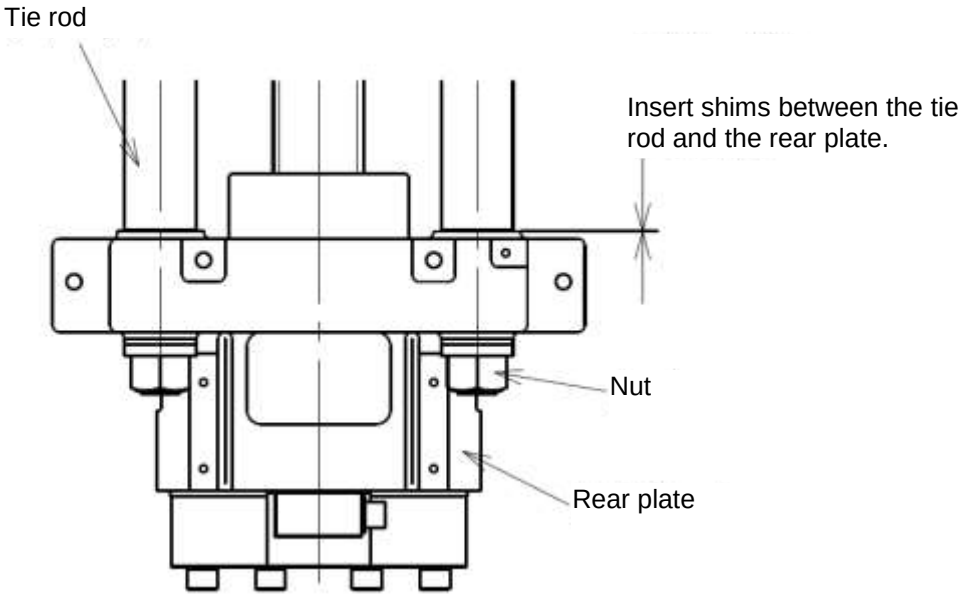

Figure 32 Adjustment for Screw Centering Using Shims

Make a notch when inserting shims.
You do not have to completely remove the nuts.

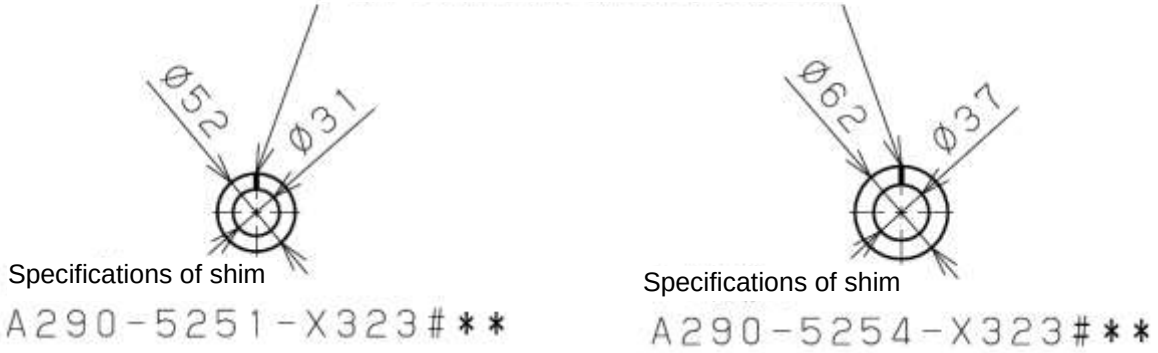

Figure 33 Shape of Shim

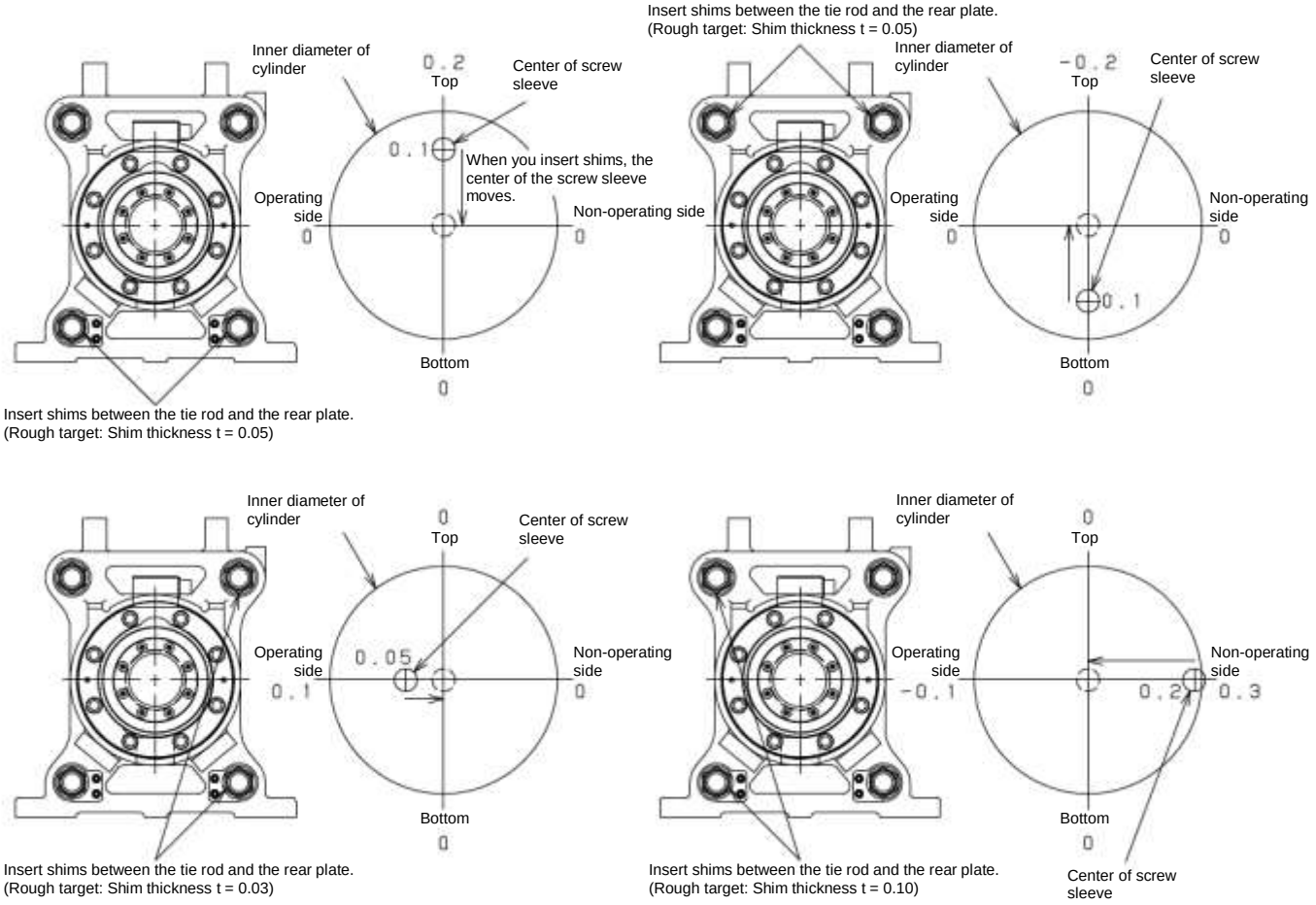

Figure 34 Adjustment Using Shims

版	年月日	担当	変更内容
02	2016.03.18	相場	全ての ROBOSHOT 機種対応
01	2013.01.09	山村	初版

原案作成	2013.01.09	担当	山村	承認	池谷

名称	S5-15　スクリュ芯出し調整手順規定
番号	ＭＩＤ５６／０２９
ファナック株式会社 生産標準類規定	ページ 30／41

15. Adjustment of the Screw Center in a ROBOSHOT S-2000i15B to S-2000i100B

- Perform adjustment in a machine in which the servo motor has been assembled and the belt tension has been adjusted.
- Temporarily fix all the LM block and LM rail attachment bolts when starting the work.
- Because adjustment is completed before shipment, you do not have to adjust it during normal maintenance unless you loosen the bolts fixing the LM guide block and rail.

(1) With the screw pulled out, attach the dial gauge to the screw sleeve as shown in the figure and set the dial gauge to 0 at the lower section of the inner circumference of the cylinder.

(2) Rotate the pulley on the screw axis (X axis) once to advance the pusher plate by one lead of the ball screw on the screw axis (X axis). Measure the amplitude at this time and fix the screw axis (X axis) at the position where the gauge value indicates the middle of the width. Measure Distance L (or read the current position on the screw axis from the screen) at this time.

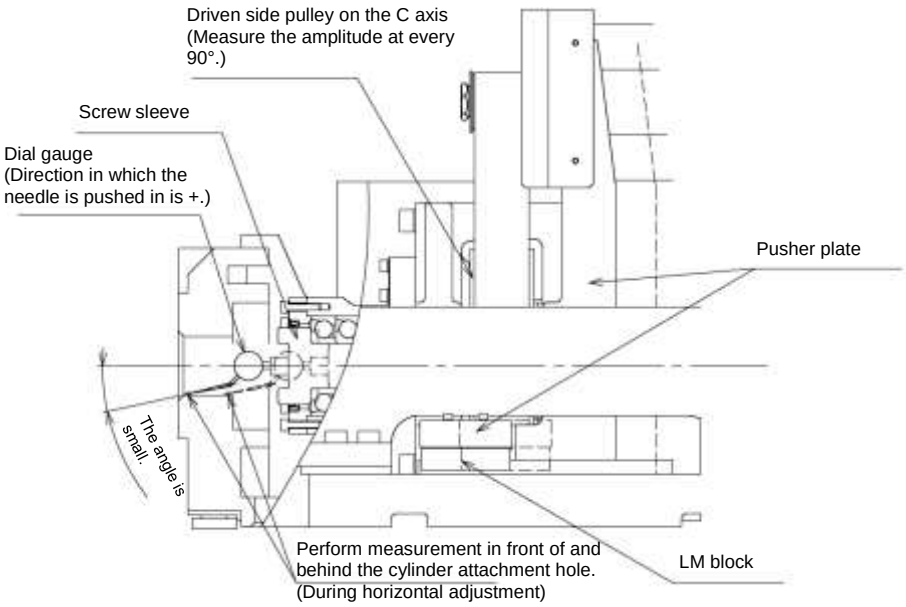

Figure 35 Attaching the Dial Gauge

Table 15 Tolerance for Adjustment of Center of Screw

Measurement position	Run-out of gauge	Shift of center
Vertical direction	0.07 or less	0.035 or less
Horizontal direction	0.05 or less	0.035 or less

15.1 Vertical Adjustment

(1) Perform vertical adjustment based on the measurement result. Insert shims between the LM guide and the pusher plate to compensate for the shift in the upper and lower centers of the screw sleeve.

(2) There are 0.05-mm shims and 0.10-mm shims. Use shims stacked in pairs for gaps of 0.13 mm or more.

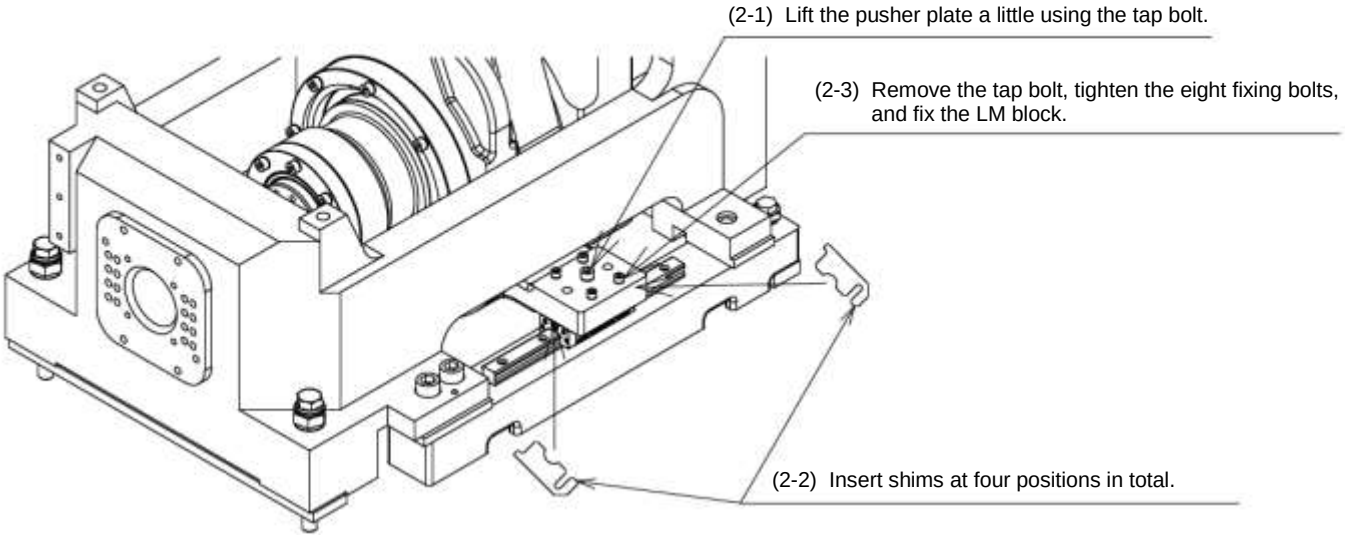

Figure 36 Vertical Adjustment

Table 16 Specifications of Shims

Model	Specifications of shims
S-2000i 15B S-2000i 30B	A290-5269-X323#**
S-2000i 50B S-2000i 100B	A290-5271-X323#**

15.2 Horizontal Adjustment

(1) After completing the vertical adjustment, press the tip of the needle of the dial gauge against the front of the barrel attachment hole, rotate the driven pulley on the screw rotary axis (C axis) once, and measure the run-out of the center.

(2) If the result shows horizontal shift, tap the pusher plate with the hammer to adjust it. After completing the adjustment, loosen the front attachment bolt of the LM guide.

(3) Then, retract the screw axis (X axis) so that the tip of the needle of the dial gauge touches the back side of the cylinder attachment hole, rotate the driven pulley on the screw rotary axis (C axis) once, and measure the run-out. Here, adjust the shift amount by tapping the pusher plate with the hammer.

(4) After completing the adjustment, loosen all the LM guide attachment bolts on the operator's panel side, advance and retract the screw axis (X axis), and loosen the LM guide attachment bolt on the non-operating side.

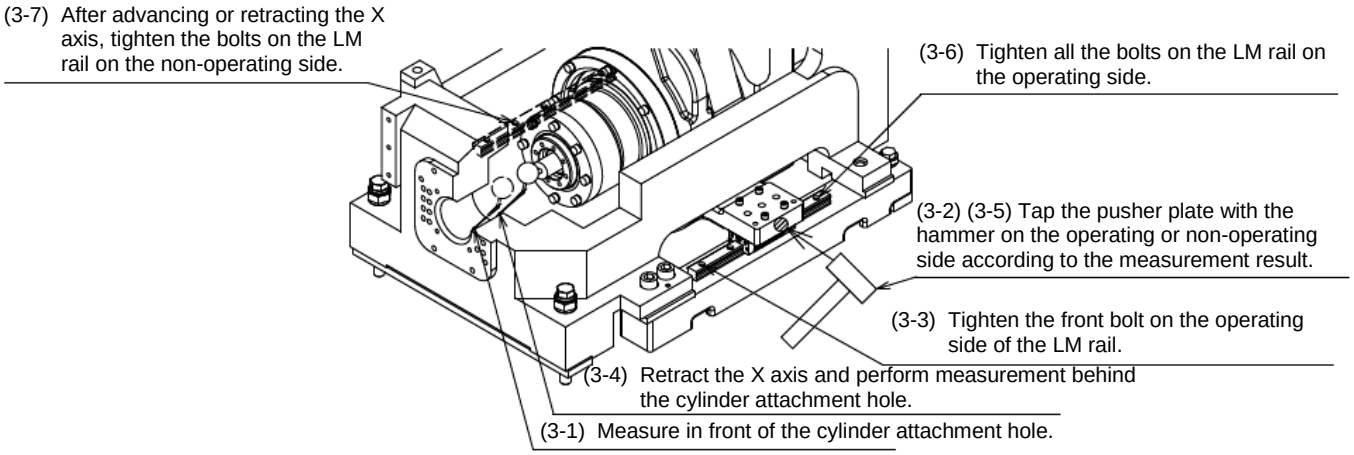

Figure 37 Horizontal Adjustment

16. Adjustment of the Screw Center in a ROBOSHOT S-2000i150B to S-2000i300B

Adjusting the screw center using the load cell

(1) Hoist the load cell with the crane or other tool and lightly tighten the bolts so that the load cell is raised a bit and fixed to the rear plate.

(2) With the water jacket and barrel fixed to the front plate, rotate the screw rotary axis (C axis) once and measure the run-out of the dial gauge. Check the center position of the screw sleeve and adjust the position by tapping the load cell with the hammer as shown in the example below.

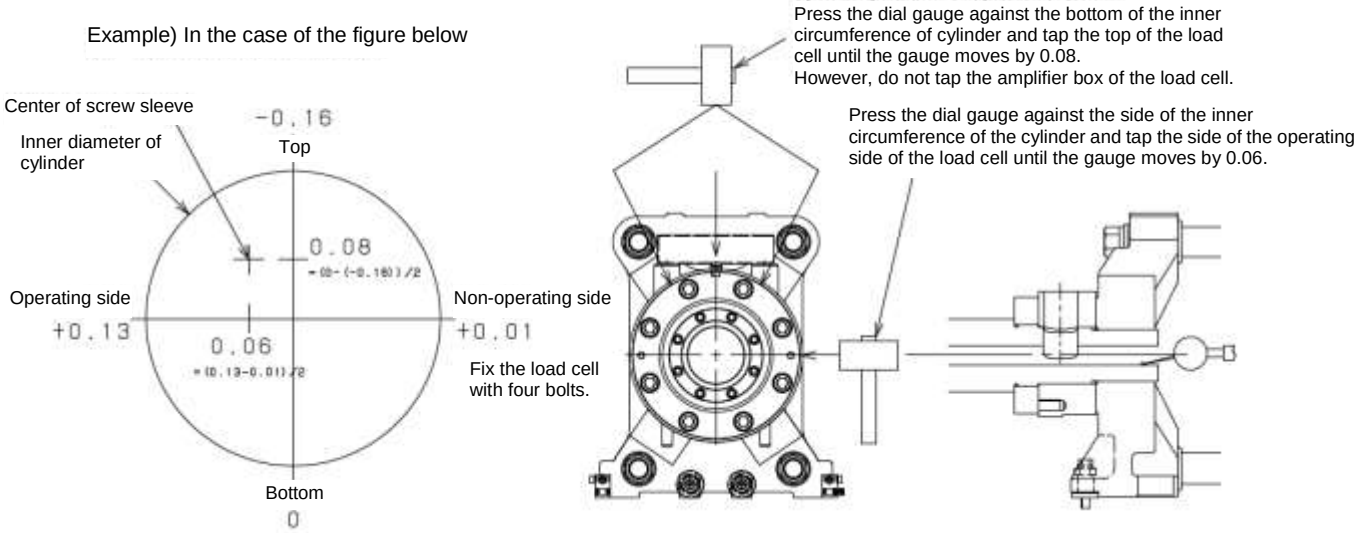

Figure 38 Centering the Screw Using the Load Cell

(3) If the measurement value falls within the tolerance after adjustment, tighten the bolts that fix the load cell to the recommended tightening torque. Rotate the driven pulley on the screw rotary axis (C axis) once again and measure the run-out of the dial gauge to check that the value is within the tolerance.

Recording the measurement results

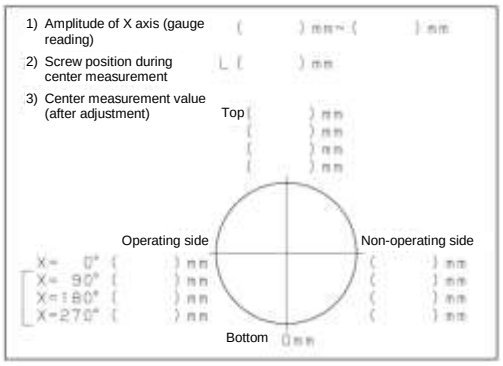

Figure 39 Recording the Measurement Result

17. Adjustment of the Screw Center in a ROBOSHOT α-S15iA to α-S100iA

- Perform adjustment in a machine in which the servo motor has been assembled and the belt tension has been adjusted.

- Temporarily fix all the LM block and LM rail attachment bolts when starting the work.

- Because adjustment is completed before shipment, you do not have to adjust it during normal maintenance unless you loosen the bolts fixing the LM guide block and rail.

(1) With the screw pulled out, attach the dial gauge to the screw sleeve as shown in the figure and set the dial gauge to 0 at the lower section of the inner circumference of the cylinder.

(2) Rotate the pulley on the screw axis (X axis) once to advance the pusher plate by one lead of the ball screw on the screw axis (X axis). Measure the amplitude at this time and fix the screw axis (X axis) at the position where the gauge value indicates the middle of the width. Measure Distance L (or read the current position on the screw axis from the screen) at this time.

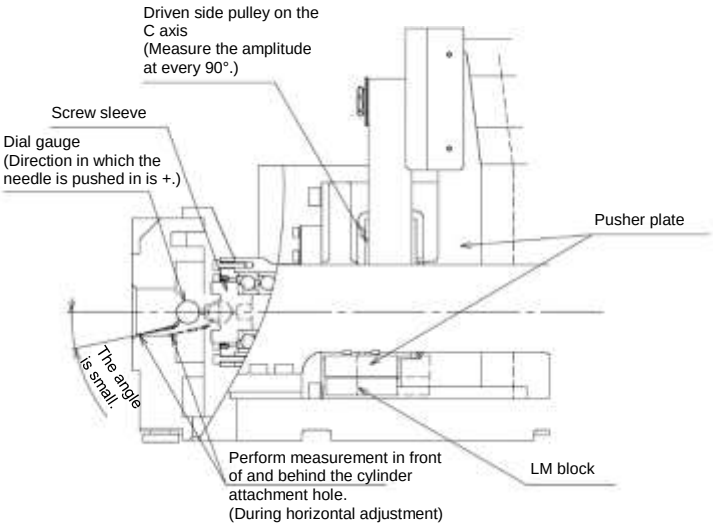

Figure 40 Attaching the Dial Gauge

Table 17 Tolerance for Adjustment of Center of Screw

Specifications	Measurement position	Tolerance		Target value	
		Run-out of gauge	Shift of center	Run-out of gauge	Shift of center
Standard screw barrel	Vertical direction	0.04 or less	0.08 or less	0.05 or less	0.025 or less
	Horizontal direction	0.04 or less	0.08 or less	0.05 or less	0.025 or less
Plated screw	Vertical direction	0.03 or less	0.06 or less	0.04 or less	0.020 or less
	Horizontal direction	0.03 or less	0.06 or less	0.04 or less	0.020 or less

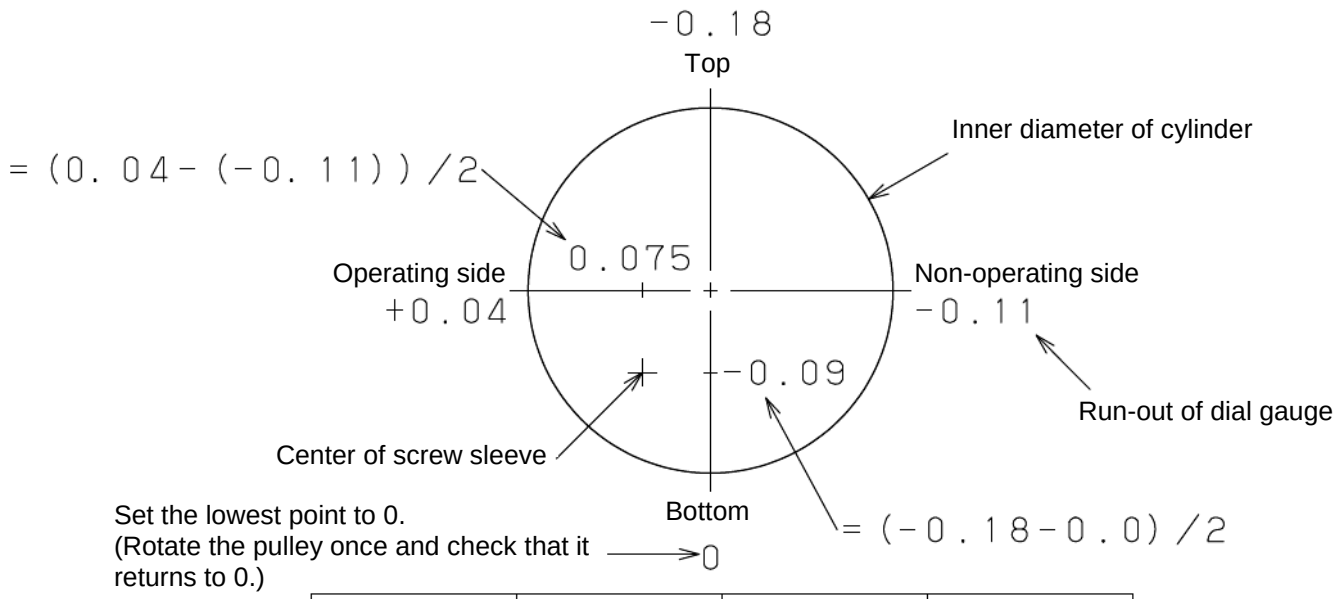

Measurement position	Gauge reading	Measurement position	Gauge reading
Top	-0.18	Operating side	+0.04
Bottom	0.00	Non-operating side	-0.11
Vertical center	-0.09	Horizontal center	+0.075

Figure 41 [Example] Indexing the Center of the Screw Sleeve

17.1 Vertical Adjustment

(1) Perform vertical adjustment based on the measurement result. Insert shims between the LM guide and the pusher plate to compensate for the shift in the upper and lower centers of the screw sleeve.

(2) There are 0.05-mm shims and 0.10-mm shims. Use shims stacked in pairs for gaps of 0.13 mm or more.

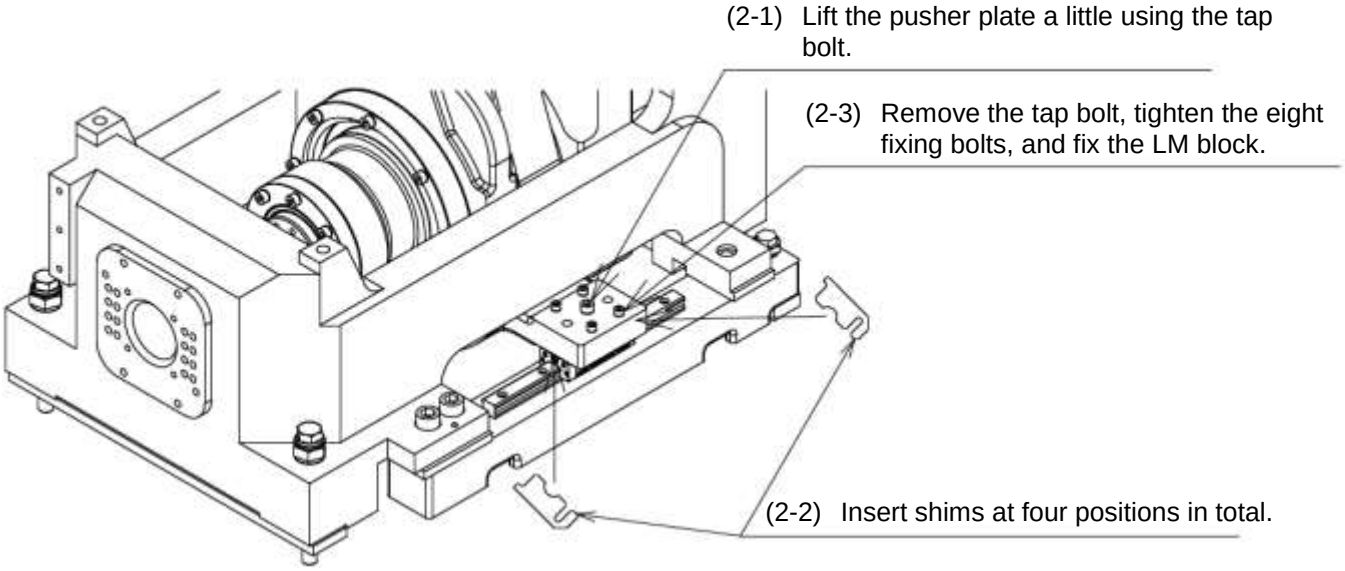

Figure 42 Vertical Adjustment

Table 18 Specifications of Shims

Model	Specifications of shims
α-S15iA α-S30iA	A290-5269-X323#**
α-S100iA α-S150iA	A290-5271-X323#**

17.2 Horizontal Adjustment

(1) After completing the vertical adjustment, press the tip of the needle of the dial gauge against the front of the barrel attachment hole, rotate the driven pulley on the screw rotary axis (C axis) once, and measure the run-out of the center.

(2) If the result shows horizontal shift, tap the pusher plate with the hammer to adjust it. After completing the adjustment, loosen the front attachment bolt of the LM guide.

(3) Then, retract the screw axis (X axis) so that the tip of the needle of the dial gauge touches the back side of the cylinder attachment hole, rotate the driven pulley on the screw rotary axis (C axis) once, and measure the run-out. Here, adjust the shift amount by tapping the pusher plate with the hammer.

(4) After completing the adjustment, loosen all the LM guide attachment bolts on the operator's panel side, advance and retract the screw axis (X axis), and loosen the LM guide attachment bolt on the non-operating side.

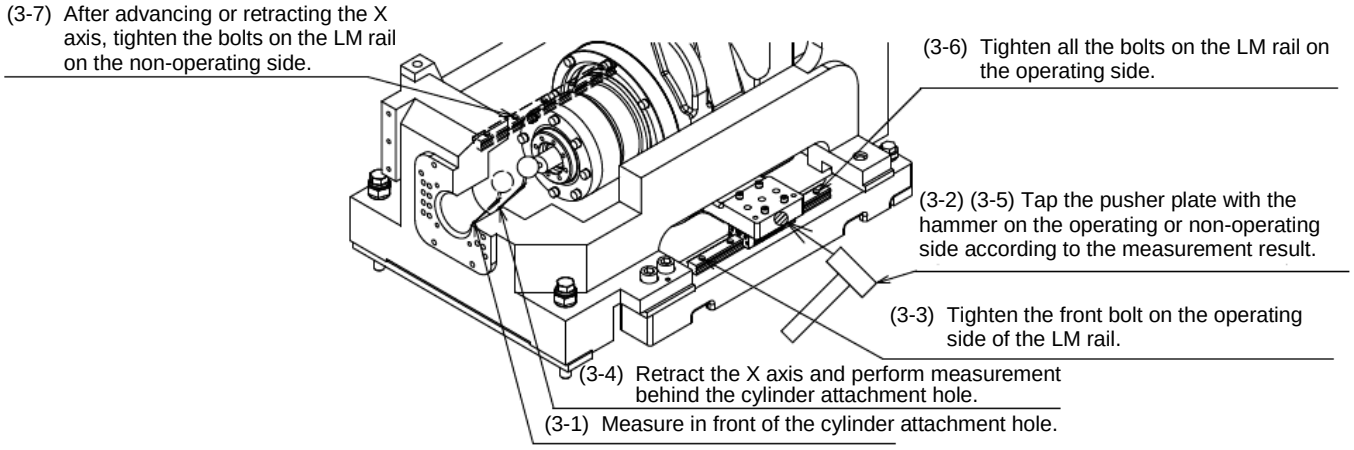

Figure 43 Horizontal Adjustment

18. Adjustment of the Screw Center in a ROBOSHOT α-S150iA to α-S300iA

Adjusting the screw center using the load cell

(1) Hoist the load cell with the crane or other tool and lightly tighten the bolts so that the load cell is raised a bit and fixed to the rear plate.

(2) With the water jacket and barrel fixed to the front plate, rotate the screw rotary axis (C axis) once and measure the run-out of the dial gauge. Check the center position of the screw sleeve and adjust the position by tapping the load cell with the hammer as shown in the example below.

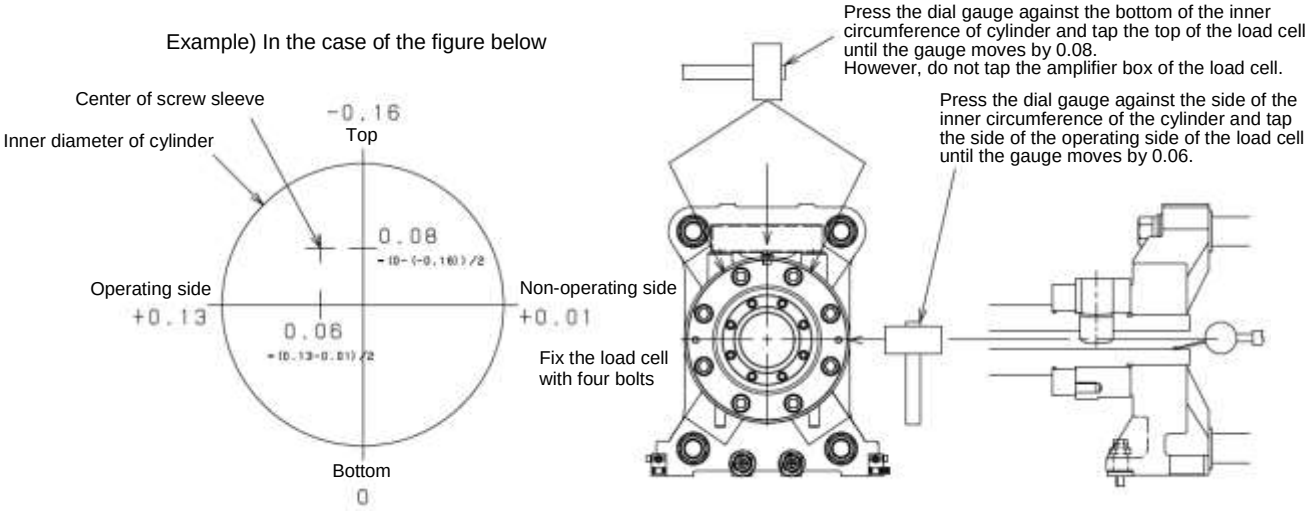

Figure 44 Centering the Screw Using the Load Cell

(3) If the measurement value falls within the tolerance after adjustment, tighten the bolts that fix the load cell to the recommended tightening torque. Rotate the driven pulley on the screw rotary axis (C axis) once again and measure the run-out of the dial gauge to check that the value is within the tolerance.

Recording the measurement results

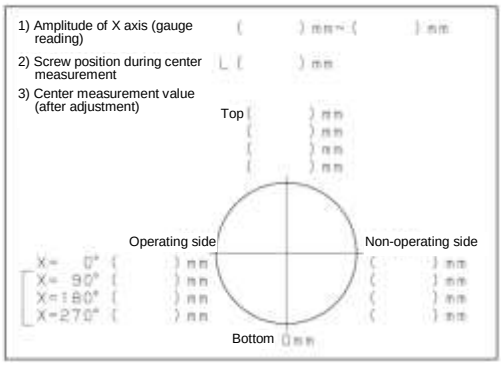

Figure 45 Recording the Measurement Result

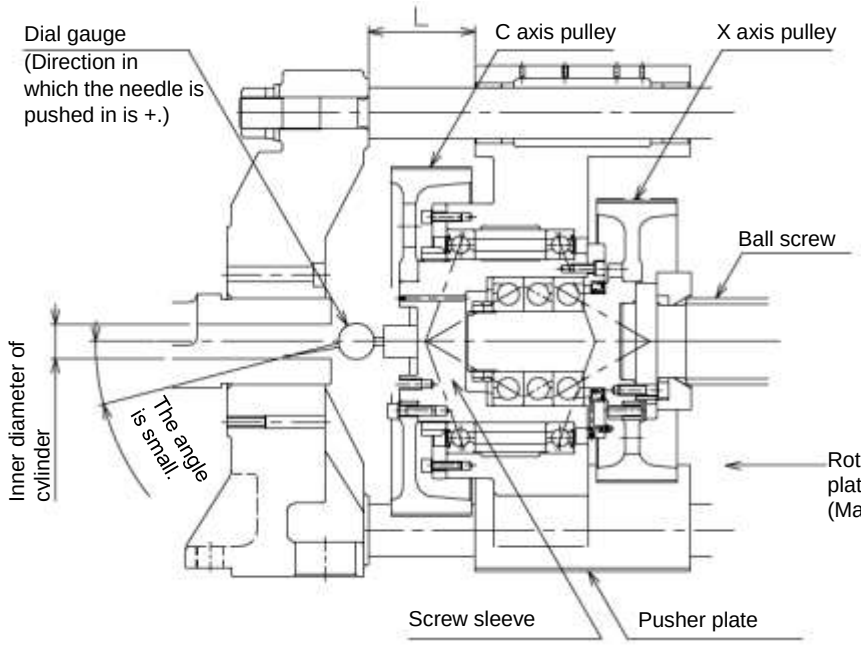

Example) If the run-out of gauge is -0.01 to -0.02 when you advance the X axis by one lead, fix the X axis at the position at which the gauge value is +0.02 and write down the L.

Model	Lead	Model	Lead
150iA	25mm		
220iA	25mm		
250iA	25mm		
300iA	25mm		

Rotate the X axis pulley once to advance the pusher plate by one lead.
(Mark the pulley with a magic marker, etc. for clarity.)

Figure 46 Measurement of the Centering of the Screw Using the Load Cell

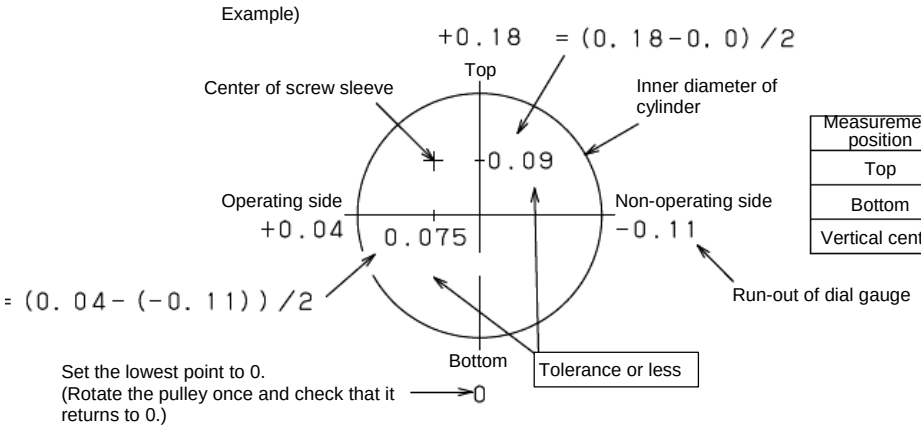

Measurement position	Gauge reading	Measurement position	Gauge reading
Top	+0.18	Operating side	+0.04
Bottom	0.00	Non-operating side	-0.11
Vertical center	+0.09	Horizontal center	+0.075

Figure 47 Estimation of the Center of the Screw Using the Load Cell

Table 19 Tolerance for Adjustment of Center of Screw

Specifications	Measurement position	Tolerance		Target value	
		Run-out of gauge	Shift of center	Run-out of gauge	Shift of center
Standard screw barrel	Vertical direction	0.04 or less	0.08 or less	0.05 or less	0.025 or less
	Horizontal direction	0.04 or less	0.08 or less	0.05 or less	0.025 or less
Plated screw	Vertical direction	0.03 or less	0.06 or less	0.04 or less	0.020 or less
	Horizontal direction	0.03 or less	0.06 or less	0.04 or less	0.020 or less

Example) The center position of the screw sleeve falls within the tolerance at [X = 0°]. However, because the sleeve rotary axis on the X axis runs out, the center position of the screw sleeve goes outside of the tolerance when you turn the X axis pulley.

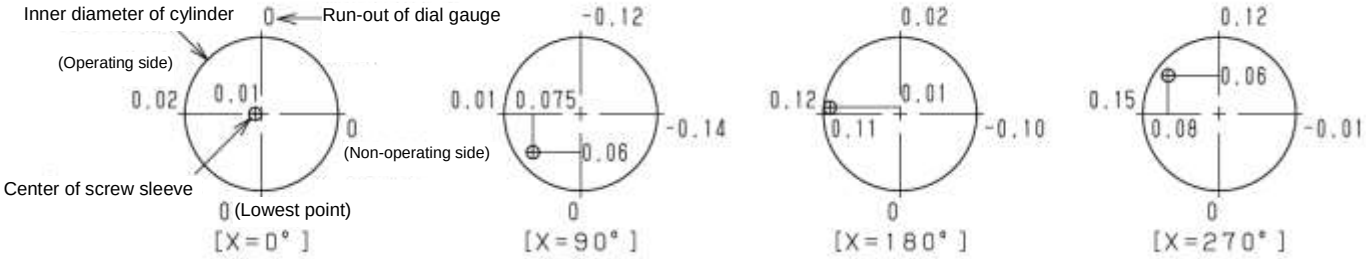

Figure 48 [Example] When the X Axis Sleeve Rotary Axis Runs Out

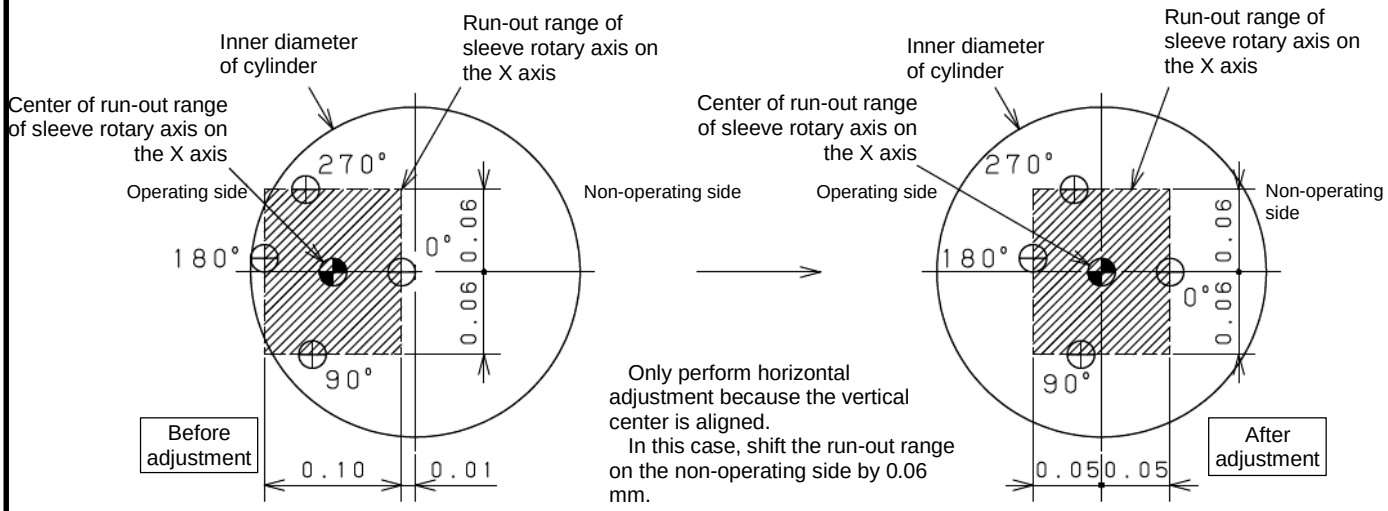

Figure 49 [Example] Run-out of the Inner Diameter of the Barrel and Sleeve Rotary Axis on the X Axis

版	年月日	担当	変更内容
02	2016.03.18	相場	全ての ROBOSHOT 機種対応
01	2013.01.09	山村	初版

原案作成	2013.01.09	担当	山村	承認	池谷

名称	S5-15　スクリュ芯出し調整手順規定
番号	ＭＩＤ５６／０２９
ファナック株式会社 生産標準類規定	ページ 41／41